kamstrup

Technical description

MULTICAL® 403

Kamstrup A/S · Industrivej 28, Stilling · DK-8660 Skanderborg · T: +45 89 93 10 00 · info@kamstrup.com · kamstrup.com

List of words and symbols

Word/symbol	Meaning	Unit	Expired designations
q_i	Minimum approved flow	[l/h]	Q_i, q_{vmin}, Q_{min}, q_{min}
q_p	Permanent/nominal approved flow	[m³/h]	Q_s, q_{vmax}, Q_n, q_n, q_{max}
q_s	Maximum approved flow [1]	[m³/h]	Q_{max}
θ	Temperature range of calculator	[°C]	
θ_q	Temperature range of flow sensor (medium)	[°C]	
θ_{hc}	Limit value for shift between heat and cooling [2]	[°C]	
ΔΘ	Temperature difference of inlet and outlet	[K]	
t_{BAT}	Battery temperature	[°C]	
DN	Nominal diameter	[mm]	
PN	Nominal pressure	[bar]	
E_c	Max. permissible error of calculator	[%]	
E_f	Max. permissible error of flow sensor	[%]	
E_t	Max. permissible error of temperature sensors	[%]	
MPE	Maximum permissible error	[%]	
PQ	Power and flow in connection with tariff		
GF	Glass fibre reinforcement		
KMP	Kamstrup Meter Protocol		
CP	Coefficient of Performance (COP)		

[1] Less than an hour/day and less than 200 hours/year
[2] Only available in meter type 6

Contents

1 General description 8
1.1 Mechanical construction 9
1.2 Electronic structure 10
2 Technical data 11
2.1 Approved meter data 11
2.2 Electrical data 13
2.3 Mechanical data 15
2.4 Materials 15
2.5 Accuracy 16
3 Type overview 17
3.1 Type number 18
3.1.1 Accessories 19
3.2 Configuration numbers 22
3.2.1 Flow sensor position >A< 23
3.2.2 Measuring unit >B< 23
3.2.3 Flow sensor coding >CCC< 23
3.2.4 Display code >DDD< 25
3.2.5 Tariffs >EE< 28
3.2.6 Pulse inputs A and B >FF-GG< 33
3.2.7 Integration mode >L< 36
3.2.8 Cold water leakage >N< 37
3.2.9 Pulse outputs C and D >PP< 37
3.2.10 Data logger profile >RR< 39
3.2.11 Encryption level >T< 41
3.2.12 Customer label >VVVV< 41
3.3 Data 42
3.4 Serial number and extended availability 44
3.5 Target date 45
4 Installation 46
4.1 Installation requirements 46
4.2 Inlet prerequisites 47
4.3 Orientation of Kamstrup's flow sensors 48
4.3.1 General recommendations 48
4.3.2 Recommendations for heat applications 49
4.3.3 Recommendations for cooling and combined heat/cooling applications 50

4.3.4 Recommendations for directly mounted temperature sensors 51
4.4 Mounting of MULTICAL® 403 calculator 52
4.4.1 Compact mounting 52
4.4.2 Wall mounting 52
4.4.3 Position of calculator 52
4.5 Operating pressure of MULTICAL® 403 53
4.6 Mounting in inlet or outlet 54
4.7 EMC conditions 54
4.8 Climatic conditions 54
4.9 Sealing 55
4.10 Pressure loss 55
5 Dimensioned sketches 57
6 Display 60
6.1 ”USER loop” 64
6.2 ”TECH loop” 64
6.2.1 Module readings 68
6.3 ”SETUP loop” 70
6.3.1 Change of parameters in the ”SETUP loop” 71
6.4 ”TEST loop” 79
7 Calculator functions 80
7.1 Application types and energy calculations 80
7.1.1 Heat/cooling energy registers E1 and E3 80
7.1.2 Energy registers E8 and E9 81
7.1.3 Outlet energy registers A1 and A2 82
7.1.4 Energy calculations 83
7.2 Measurement of the coefficient of performance (CP) of a heat pump 85
7.2.1 Measurement of the coefficient of performance (CP) of a gas boiler 87
7.3 Offset adjustment of temperature sensor measurement 87
7.4 Bifunctional heat/cooling metering 88
7.5 Min/max calculations of power (P) and flow (Q) 89
7.6 Temperature measurement 91
7.7 Information code types 92
7.7.1 Information code types 92
7.7.2 Examples of information codes 93
7.7.3 Information codes in display and in serial communication 94
7.7.4 Information codes in transport state 95
7.8 Transport state 95

7.9 Info and config logger 97
7.9.1 Info logger 97
7.9.2 Config logger 97
7.10 Summer/winter time adjustment 98
8 Flow sensor 99
8.1 Measuring principles 99
8.2 Signal path and flow calculation 99
8.3 Flow limits 101
9 Temperature sensors 102
9.1 Temperature sensor types 103
9.2 Cable effect 104
9.3 Installation 104
9.3.1 Identification of inlet and outlet temperature sensors 104
9.3.2 Electrical connection 105
9.3.3 Pt500 direct short sensor set 105
9.3.4 Pt500 ø5,0 mm / ø5,2 mm sensor types 107
9.3.5 Pt500 ø5.8 mm / ø6.0 mm pocket sensor set 109
10 Power supply 110
10.1 Battery, 2 x A-cells 110
10.2 Lithium battery, 1 x D-cell 111
10.3 Lithium battery, 1 x C-cell IoT 111
10.4 Battery lifetimes 112
10.5 230 VAC supply module 113
10.6 24 VAC supply module 113
10.7 230 VAC high-power SMPS 114
10.8 24 VAC/VDC high-power SMPS 114
10.9 Power consumption of mains connected meter 114
10.10 Safety transformer 230/24 VAC 115
10.11 Supply cables for supply module 115
10.12 Retrofitting and exchange of supply modules 116
10.13 Data-backup in case of interruption of supply 117
11 Communication modules 118
11.1 Marking on communication modules 119
11.2 Modules 120
11.2.1 HC-003-10: Data Pulse, inputs (In-A, In-B) 120
11.2.2 HC-003-11: Data Pulse, outputs (Out-C, Out-D) 120

11.2.3 HC-003-20: Wired M-Bus, inputs (In-A, In-B) 120
11.2.4 HC-003-21: Wired M-Bus, outputs (Out-C, Out-D) 121
11.2.5 HC-003-22: Wired M-Bus, Thermal Disconnect 121
11.2.6 HC-003-30: Wireless M-Bus, inputs (In-A, In-B) 121
11.2.7 HC-003-31: Wireless M-Bus, outputs (Out-C, Out-D) 122
11.2.8 HC-003-32: linkIQ/wM-Bus, inputs (In-A, In-B), EU 122
11.2.9 HC-003-33: linkIQ/wM-Bus, outputs (Out-C, Out-D),EU 122
11.2.10 HC-003-34: wM-Bus, inputs (In-A, In-B),912,5/915/918,5 MHz 123
11.2.11 HC-003-40: Analog outputs 2 x 0/4…20 mA 123
11.2.12 HC-003-42: KNX Comminication 123
11.2.13 HC-003-43: PQT Controller 123
11.2.14 HC-003-50: Low Power Radio, inputs (In-A, In-B), 434 MHz 124
11.2.15 HC-003-51: Low Power Radio GDPR, inputs (In-A, In-B), 434 MHz 124
11.2.16 HC-003-53: LoRaWAN (Elvaco) 124
11.2.17 HC-003-56: NB-IoT, inputs (In-A, In-B) 125
11.2.18 HC-003-58: NB-IoT (Elvaco) 125
11.2.19 HC-003-66: BACnet MS/TP, inputs (In-A, In-B) 125
11.2.20 HC-003-67: Modbus RTU, inputs (In-A, In-B) 126
11.2.21 HC-003-81: BACnet IP, inputs (In-A, In-B) 126
11.2.22 HC-003-82: Modbus/KMP TCP/IP, inputs (In-A, In-B) 126
11.2.23 HC-003-83: READy Ethernet, inputs (In-A, In-B) 126
11.3 Reading high resolution registers 127
11.4 Mounting of antenna 127
11.5 Module retrofitting. 128
11.6 Supply of modules 129
12 Data communication 130
12.1 MULTICAL® 403 Data Protocol 130
12.2 Optical interface 130
12.2.1 Power-saving in connection with the optical interface 130
12.3 Data protocol 130
13 Test and calibration 131
13.1 Meter cycle 131
13.2 Test 132
13.2.1 Test of flow sensor 132
13.2.2 Test of calculator 132
13.3 High-resolution volume and energy 133
13.4 Temperature calibration 133

13.5 Pulse interface 133
13.5.1 Verification pulses 134
13.5.2 Use of high-resolution pulses 134
13.6 True energy calculation 135
14 Calibration of MULTICAL® 403 using METERTOOL HCW 136
14.1 Calibration equipment 136
14.2 Functional description 137
14.3 Calibration data 137
14.4 Start of calibration 138
14.5 Printing of certificate 138
14.6 LogView HCW 139
14.6.1 Application 140
15 Approvals 141
15.1 Type approvals 141
15.2 The Measuring Instruments Directive 141
16 Troubleshooting 142
17 Disposal 143
18 Documents 144

1 General description

MULTICAL® 403 is a static heat meter, cooling meter or bifunctional heat/cooling meter based on the ultrasonic principle. The meter is intended for energy measurement in almost all types of thermal installations where water is used as the energy-conveying medium.

According to EN 1434 MULTICAL® 403 can be designated a "hybrid instrument", also called a compact meter. In practice this means that flow sensor and calculator must not be separated.

If flow sensor and calculator have been separated and the seals are broken, the meter is no longer valid for billing purposes, and the factory guarantee no longer applies.

MULTICAL® 403 employs ultrasonic measuring technique, ASIC and microprocessor technology. A single-board construction comprises all calculating and flow measuring circuits. This makes the design compact and rational, and, in addition, exceptionally high measuring accuracy and reliability is obtained.

Volume is measured using bidirectional ultrasonic technique based on the transit time method, proven a long-term stable and accurate measuring principle. Through two ultrasonic transducers the sound signal is sent both with and against the flow. The ultrasonic signal travelling with the flow reaches the opposite transducer first. The time difference between the two signals can be converted into flow velocity and thereby also volume.

Accurately matched Pt500 sensors measure inlet and outlet temperatures according to EN 60 751. MULTICAL® 403 normally comes with a Pt500 sensor set, e.g. direct short sensors according to EN 1434-2, but also ø5,0 mm, ø5,2 mm, ø5.8 mm and ø6.0 mm pocket sensors are available. Kamstrup sensor pockets are available for all sizes of pocket sensors, and all sizes can be mounted as direct sensors in the flow sensor, except ø5,8 mm and ø6,0 mm. Accumulated heat energy and/or cooling energy can be displayed in kWh, MWh or GJ with seven or eight significant digits plus measuring unit. The display has been specially designed with a view to obtaining long lifetime and sharp contrast in a wide temperature range.

Other reading options are: accumulated water consumption, operating hour counter, error hour counter, current temperature measurements, current flow and power readings. Furthermore, MULTICAL® 403 can be configured to display monthly and yearly loggings, target date data, max/min flow, max/min power, information code, current date as well as user-defined tariffing.

MULTICAL® 403 is powered by an internal D-cell lithium battery with a lifespan up to 16 years or a 2 x A-cell lithium packet with a lifespan up to 9 years. If the meter has an NB-IoT module, the voltage supply can be a C-cell lithium battery with a life of up to 12 years. Alternatively, the meter can be mains supplied, either by 24 VAC, 230 VAC or 24 VAC/VDC.

In addition to the energy meter's own data, MULTICAL® 403 can display the accumulated consumptions of up to two extra meters, e.g. an electricity meter or cold and hot water meters, which supply a pulse signal to MULTICAL® 403 via reed-switch or electronic output. The contact signals from the extra meters are connected via the communication modules.

A multiple plug placed behind the seal of the top cover is used in connection with calibration and adjustment during verification as well as in connection with communication modules. MULTICAL® 403 is available with communication modules. See paragraphs 11 for details. The modules are available with either pulse inputs or pulse outputs.

In designing MULTICAL® 403 we have attached great importance to flexibility through programmable functions and plug-in modules (see paragraphs 3.2 and 11) in order to secure optimum use in a wide range of applications. In addition, the construction makes it possible to update previously installed MULTICAL® 403 via the PC-program METERTOOL HCW.

This technical description has been written with a view to enabling operations managers, meter installers, consulting engineers and distributors to utilize all functions comprised in MULTICAL® 403. Furthermore, the description is targeted at laboratories performing tests and verification.

The technical description is currently updated. Find the latest edition at

https://www.kamstrup.com/en-en/heat-solutions/meters-devices/meters/multical-403/documents

1.1 Mechanical construction

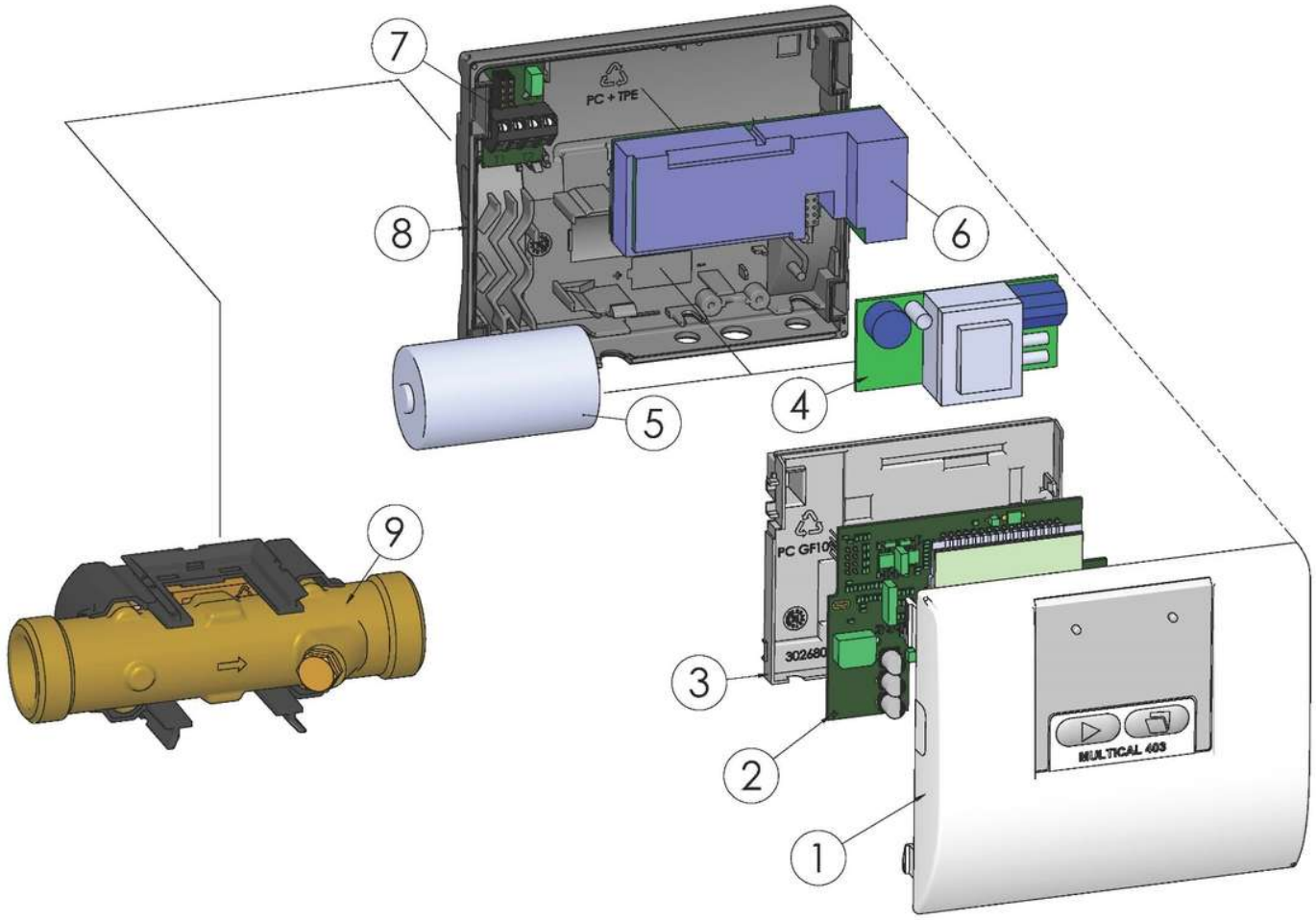

Figure 1

1	Top cover with front keys and laser engraving
2	PCB with microcontroller, flow-ASIC, display etc.
3	Verification cover (may only be opened by an authorised laboratory)
4	Either a power supply module can be mounted
5	or a battery can be mounted

6	Data module, e.g. M-Bus
7	Connection for temperature sensors
8	Bottom cover
9	Flow sensor (IP68)

1.2 Electronic structure

The electronic construction of MULTICAL® 403 is shown in the block diagram below. One of the described modules, which include pulse inputs or pulse outputs in addition to data communication, can be mounted in the module bay of MULTICAL® 403. During operation MULTICAL® 403 only includes one of the seven supply module types.

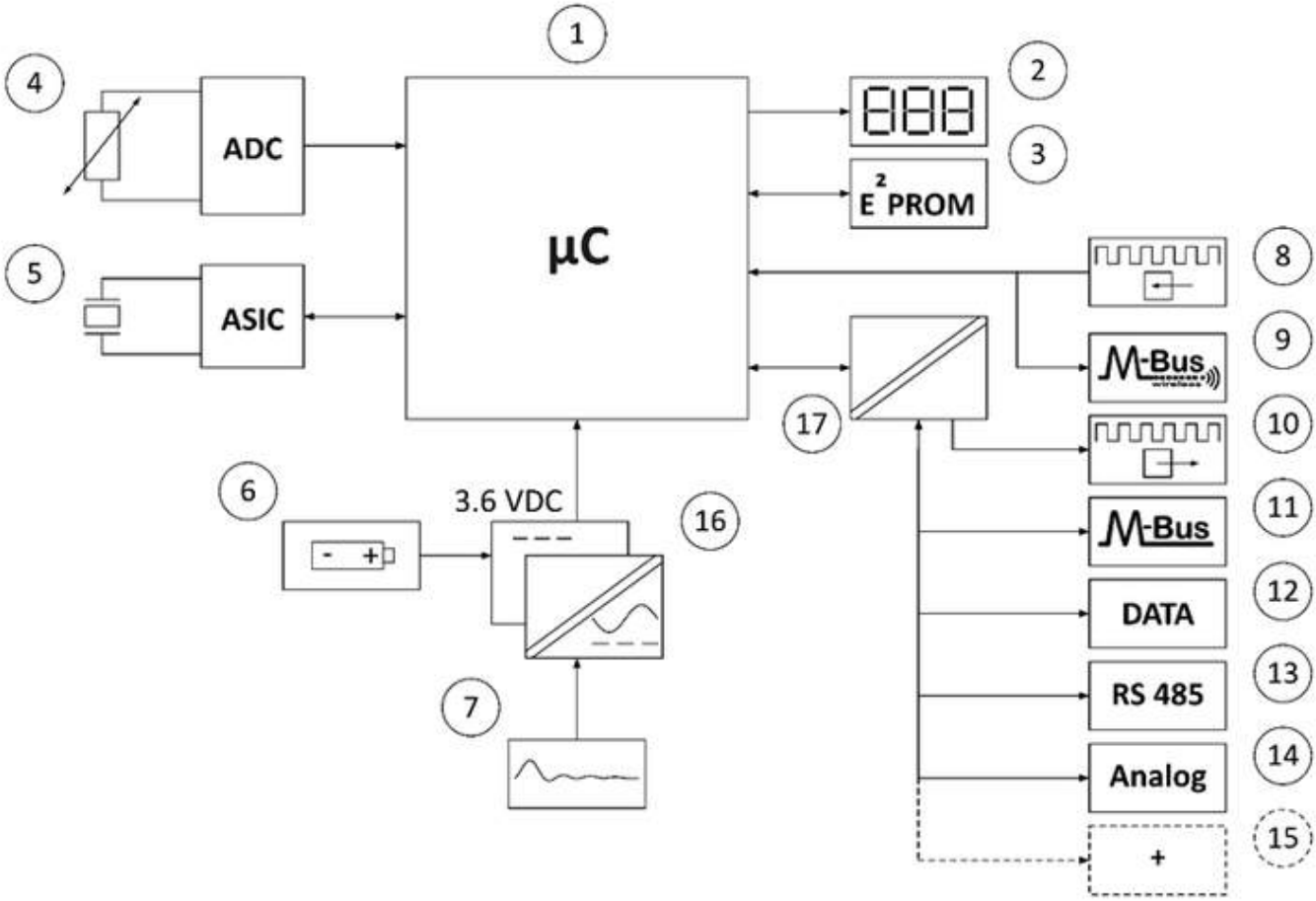

1	Microcontroller
2	Display, eight-digit seven-segment + symbols
3	Non-volatile memory, E² PROM
4	Temperature sensors Pt500
5	Flow sensor, piezo elements
6	Battery, 2 x A-cell, 1 x C-cell or 1 x D-cell
7	Linear power supply, 24 VAC or 230 VAC.
8	Pulse inputs
9	Wireless M-Bus

10	Pulse outputs
11	M-Bus
12	Data communication
13	RS485
14	Analog 0/4…20 mA
15	… and even more communication options
16	Galvanically separated power supplies
17	Galvanically separated communication modules

Note: The arrows in the figure indicate the signal direction

2 Technical data

2.1 Approved meter data

Approvals	**DK-0200-MI004-037, heat meter** According to MID 2014/32 EU, EN 1434:2007/AC:2007, EN 1434:2015 + A1:2018, EN 1434:2022 and WELMEC 7.2:2021
	TS 27.02 009, cooling meter and cooling/heat meter According to DK-BEK 1178 , EN 1434:2007/AC:2007, EN 1434:2015 + A1:2018 and EN 1434:2022
EU directives	Measuring Instruments Directive, Low Voltage Directive, Electromagnetic Compatibility Directive, Pressurized Equipment Directive, Radio Equipment Directive, RoHS Directive

Heat meter approval	DK-0200-MI004-037	
Temperature range	θ: 2 °C…180 °C	The stated minimum temperatures are related to the type approval. The meter has no cut-off for low temperature and thus measures as low temperatures as 0,01 °C and 0,01 K.
Differential range	$\Delta\Theta$: 3 K…178 K	
Cooling meter and cooling/heat meter	TS 27.02 009	
Temperature range	θ: 2 °C…180 °C	
Differential range	$\Delta\Theta$: 3 K…178 K	
Differential range, cut-off	0,00…2,50 K	
Temperature of medium	θ_q: 2 °C…130 °C	

Accuracy	
- Calculator	$E_c = \pm (0{,}5 + \Delta\Theta_{min}/\Delta\Theta)$ %
- Flow sensor	$E_f = \pm (2 + 0{,}02\ q_p/q)$, but not exceeding ±5 %
Temperature sensor connection	Type 403-W/T/C Pt500 – EN 60 751, 2-wire connection
EN 1434 designation	Environmental class A and C
MID designation	Mechanical environment: Class M1 and M2
	Electromagnetic environment: Class E1 and E2[1)]
	Condensing environment, closed location (indoors), 5…55 °C

[1)] From 2023, MULTICAL® 403 can be marked both as E1 or E2

Type number	Nom. flow q_p [m^3/h]	Max. flow q_s [m^3/h]	Min. flow q_i [l/h]	Dynamic range [q_p:q_i]	Min. flow cut-off [l/h]	Saturation flow [m^3/h]	Pressure loss Δp @ qp [bar]	Connection on meter	Length [mm]
403-x-10	0,6	1,2	6	100:1	3	1,5	0,03	G¾B	110
403-x-30	0,6	1,2	6	100:1	3	1,5	0,03	G1B	190
403-x-40	1,5	3,0	15	100:1	3	4,6	0,09	G¾B	110
403-x-42	1,5	3,0	6	250:1	3	4,6	0,09	G¾B	110
403-x-50	1,5	3,0	15	100:1	3	4,6	0,09	G¾B	165
403-x-52	1,5	3,0	6	250:1	3	4,6	0,09	G¾B	165
403-x-60	1,5	3,0	15	100:1	3	4,6	0,09	G1B	110
403-x-70	1,5	3,0	15	100:1	3	4,6	0,09	G1B	130
403-x-72	1,5	3,0	6	250:1	3	4,6	0,09	G1B	130
403-x-80	1,5	3,0	15	100:1	3	4,6	0,09	G1B	165
403-x-82	1,5	3,0	6	250:1	3	4,6	0,09	G1B	165
403-x-90	1,5	3,0	15	100:1	3	4,6	0,09	G1B	190
403-x-92	1,5	3,0	6	250:1	3	4,6	0,09	G1B	190
403-x-A0	2,5	5,0	25	100:1	5	7,6	0,09	G1B	130
403-x-A2	2,5	5,0	10	250:1	5	7,6	0,09	G1B	130
403-x-B0	2,5	5,0	25	100:1	5	7,6	0,09	G1B	190
403-x-B2	2,5	5,0	10	250:1	5	7,6	0,09	G1B	190
403-x-D0	3,5	7,0	35	100:1	7	9,2	0,07	G5/4B	260
403-x-D2	3,5	7,0	14	250:1	7	9,2	0,07	G5/4B	260
403-x-F0	6,0	12	60	100:1	12	18	0,06	G5/4B	260
403-x-F2	6,0	12	24	250:1	12	18	0,06	G5/4B	260
403-x-G0	6,0	12	60	100:1	12	18	0,06	DN25	260
403-x-G2	6,0	12	24	250:1	12	18	0,06	DN25	260
403-x-H0	10	20	100	100:1	20	30	0,06	G2B	300
403-x-H2	10	20	40	250:1	20	30	0,06	G2B	300
403-x-J0	10	20	100	100:1	20	30	0,06	DN40	300
403-x-J2	10	20	40	250:1	20	30	0,06	DN40	300
403-x-K0	15	30	150	100:1	30	46	0,14	DN50	270
403-x-K2	15	30	60	250:1	30	46	0,14	DN50	270

Table 1

2.2 Electrical data

Calculator data

Typical accuracy	Calculator: E_c ± (0,15 + 2/ΔΘ) %	Sensor set: E_t ± (0,4 + 4/ΔΘ) %	
Display	LCD – 7 or 8 digits, digit height 8,2 mm		
Resolutions	9999,999 – 99999,99 – 999999,9 – 9999999		
	99999,999 – 999999,99 – 9999999,9 – 99999999		
Energy units	MWh – kWh – GJ		
Data logger (EEPROM),	Logging intervals: From one minute to one year		
Programmable	Logger content: All registers can be selected		
	Standard logger profile: 20 years, 36 months, 460 days, 72 hours		
Info logger (EEPROM)	50 info codes		
Clock/calendar (with back-up battery)	Clock, calendar, leap year compensation, target date		
Clock deviation	Unadjusted by AMR:	Less than 15 min./year from legal time	
	Adjusted by AMR every 48 hrs:	Less than 7 sec. from legal time	
Summer/winter time (DST)	Programmable under country code. The function can be disabled so that ”technical normal time” is used		
Data communication	KMP protocol with CRC16 used for optical communication as well as modules.		
Power of temperature sensors	< 10 μW RMS		
Supply voltage	3,6 VDC ± 0,1 VDC		
Battery	3,65 VDC, D-cell lithium	3,65 VDC, 2 x A cells lithium	3,65 VDC, C-cell lithium[1]
Replacement interval			
- Wall mounted	16 years @ t_{BAT} < 30 °C	9 years @ t_{BAT} < 30 °C	
- Mounted on flow sensor	14 years @ t_{BAT} < 40 °C	8 years @ t_{BAT} < 40 °C	
	See paragraph 10.4 for further information.		
Back-up battery (for real time clock)	3,0 VDC, BR-cell lithium Lifetime: 20 years @ t_{BAT} < 40 °C with connected battery/supply or 4 years @ t_{BAT} < 40 °C without connected battery/supply		
Mains supply	230 VAC +15/-30 %, 50/60 Hz 24 VAC ±50 %, 50/60 Hz		
Insulation voltage	3,75 kV		
Power consumption	< 1 W		
Back-up supply	Integral SuperCap eliminates interruptions due to short-term power failures		
	(Supply modules type 403-xxxxxxxxxxx7 and -8 only)		
EMC data	Fulfils EN 1434 class A and C (MID class E1 and E2)		

[1] For especially current-demanding applications, such as battery operation of an NB-IoT module. This battery package includes a lithium C-cell as well as a special capacitor that helps the battery to deliver high pulse currents.

Temperature measurement		t1 Inlet temperature	t2 Outlet temperature	ΔΘ (t1-t2) Heat measurement	ΔΘ (t2-t1) Cooling measurement	t5 Preset of A1 and A2
403-W/T/C 2-W Pt500	Measuring range	0,00…185,00 °C				

Offset adjustment ± 0,99 K joint zero point adjustment for inlet and outlet temperatures
See paragraph 7.3

Max. cable lengths		Pt500, 2-wire
	(Max. ø6 mm cable)	2 x 0,25 mm²: 10 m

Pulse inputs A and B In-A 65-66 and In-B: 67-68 via module	Electronic switch	Reed-switch
Pulse input	680 kΩ pull-up to 3,6 V	680 kΩ pull-up to 3,6 V
Pulse ON	< 0,4 V i > 30 ms	< 0,4 V i > 500 ms
Pulse OFF	> 2,5 V i > 30 ms	> 2,5 V i > 500 ms
Pulse frequency	< 3 Hz	< 1 Hz
Electrical isolation	No	No
Max. cable length	25 m	25 m
Requirements to ext. contact	Leak current at function open < 1 μA	

Pulse outputs C and D
Out-C: 16-17 and Out-D: 18-19 via module

Meter factor	Heat meter:	Out-C = CE+ Out-D = CV
	Cooling meter:	Out-C = CE- Out-D = CV
	Heat/cooling meter:	Out-C = CE+ Out-D = CE-

Communications module	**HC-003-11 (Before 2017-05)** **HC-003-21 & -31 (Before 2018-04)**	**HC-003-11 (After 2017-05)** **HC-003-21 & -31 (After 2018-04)**
Pulse output type	Open collector (OB)	Opto FET
External voltage	5…30 VDC	1…48 VDC/AC
Current	< 10 mA	< 50 mA
Residual voltage	U_{CE} ≈ 1 V at 10 mA	R_{ON} ≤ 40 Ω
Electrical isolation	2 kV	2 kV
Max. cable length	25 m	25 m

2.3 Mechanical data

Environmental class	Fulfils MID class M1 and M2
Ambient temperature	5…55 °C, condensing, closed location (installation indoors)
Protection class	Calculator: IP54 Flow sensor: IP68 According to EN/IEC 60529

Medium temperatures

Heat meters 403-W	2…130 °C	At medium temperatures below ambience or above 90 °C in flow sensor we recommend that the calculator is wall mounted.
Cooling meters 403-C	2…50 °C	
Heat/cooling meters 403-T	2…130 °C	
Medium in flow sensor	Water (district heating water as described in AGFW FW510)	

Storage temperature	-25…60 °C (drained flow sensor)
Pressure stage	PN16/PN25, PS25
Weight	From 0,9 to 8,6 kg depending on flow sensor size
Flow sensor cable	1,5 m (cable undemountable)
Connecting cables	ø3,5…6 mm
Supply cable	ø5…8 mm

2.4 Materials

Wetted parts	Case, thread	Hot-pressed dezincification proof brass (CW 602N)
	Case, flange	Stainless steel, material no. 1.4308
	Transducer	Stainless steel, material no. 1.4404
	O-rings	EPDM
	Measuring tube	Thermoplastic, PES 30 % GF
	Reflectors	Thermoplastic, PES 30 % GF and stainless steel, material no. 1.4306
Flow sensor case	Top/wall bracket	Thermoplastic, PC 20 % GF
Calculator case	Top and base	Thermoplastic, PC 10 % GF with TPE (thermoplastic elastomer)
	Verification cover	Thermoplastic, PC 10 % GF
Cables	Silicone cable with inner Teflon insulation	

2.5 Accuracy

Heat meter components	MPE according to EN 1434-1	MULTICAL® 403, typical accuracy
Flow sensor	$E_f = \pm (2 + 0{,}02\ q_p/q)$, but not exceeding ±5 %	$E_f = \pm (1 + 0{,}01\ q_p/q)$ %
Calculator	$E_c = \pm (0{,}5 + \Delta\Theta_{min}/\Delta\Theta)$ %	$E_c = \pm (0{,}15 + 2/\Delta\Theta)$ %
Sensor set	$E_t = \pm (0{,}5 + 3\ \Delta\Theta_{min}/\Delta\Theta)$ %	$E_t = \pm (0{,}4 + 4/\Delta\Theta)$ %

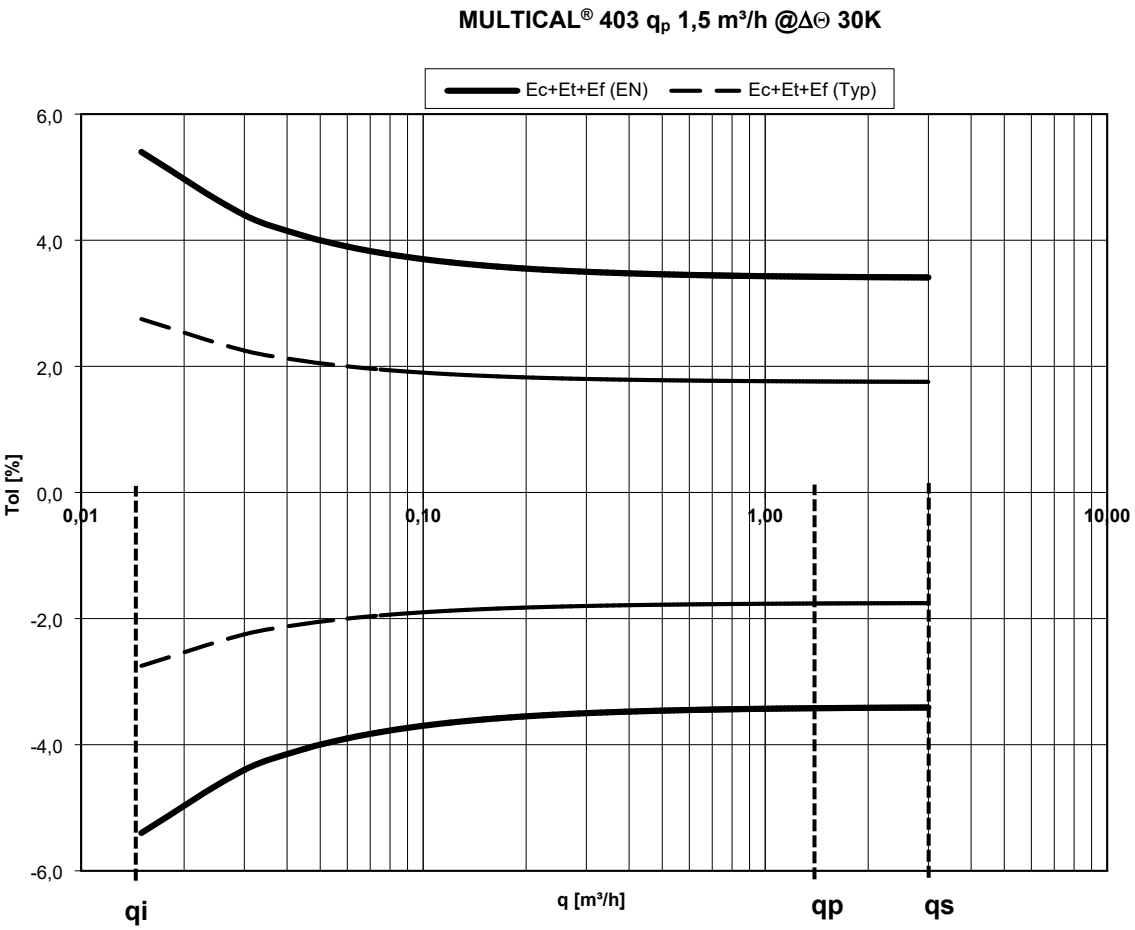

Diagram 1: Total typical accuracy of MULTICAL® 403 compared to EN 1434-1.

3 Type overview

MULTICAL® 403 is available in various combinations as required by the customer. First select the required hardware from the type overview, and next select the required software configuration via the configuration number (config number). Further, certain data are configured under the country code, which includes e.g. the definition of the time zone, the primary M-Bus address as well as yearly and monthly target date. Through these selections and configurations MULTICAL® 403 is adjusted to its current task.

The meter is configured at the factory and is ready for use. The configuration can, however, be changed/ reconfigured after installation, from the meter's "SETUP loop" or by means of either METERTOOL HCW or READy. Read more about METERTOOL HCW in the "Technical description 5512-2097" and about the "SETUP loop" in paragraph 6.3.

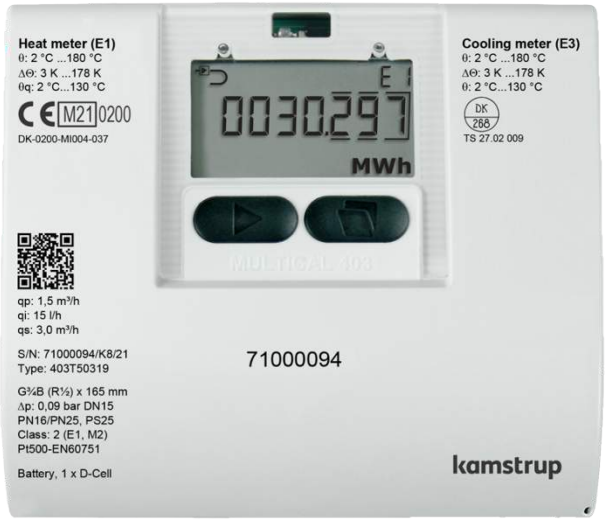

Type number:
>403-xxxxxx-xxxxx<

The first 9 digits of the type number (**403-xxxxxx**-xxxxx) are written on the meter's front and cannot be changed after production. The last 5 digits of the type number (403-xxxxxx-**xxxxx**) are not written on the meter, they can be read from the display.

Config. number:
>A-B-CCC-DDD-EE-FF-GG-L-N-PP-RR-T-VVVV<

The config number is not written on the meter, but can be displayed distributed by four readings in "TECH loop".

Config 1: >A-B-CCC-DDD<

Flow sensor position-Measuring unit-Resolution-Display code

Config 2: >EE-FF-GG-L-N<

Tariff-Pulse inputs-Integration mode-Leakage

Config 3: >PP-RR-T<

Pulse outputs-Data logger profile-Encryption level

Config 4: >VVVV<

Customer label

Serial number:
>xxxxxxxx/WW/yy<

Consisting of:

8-digit serial number (**xxxxxxxx**)
2-digit device code for extended availability **(WW)**, see sect. 3.4
2-digits for production year **(yy)**

The unique serial number is written on the meter and cannot be changed after factory programming.

Data:
During production of MULTICAL® 403 it is programmed with a number of measuring values. See section 3.3 for more details about these measuring values.

3.1 Type number

								Static data				*Dynamic data*
								403-XXXXXX	-			XXXXX
								Written on the meter's front				Can be displayed
				Type 403-	□	□□	□	□□		□□	□	□□
Sensor connection												
Pt500 Heat meter					W							
Pt500 Cooling meter and heat/cooling meter					T							
Pt500 Cooling meter					C							
Flow sensor q_p [m³/h]	Connection	Length [mm]	Dynamic range									
0,6	G¾B (R½)	110	100:1			10						
0,6	G1B (R¾)	190	100:1			30						
1,5	G¾B (R½)	110	100:1			40						
1,5	G¾B (R½)	165	100:1			50						
1,5	G1B (R¾)	110	100:1			60						
1,5	G1B (R¾)	130	100:1			70						
1,5	G1B (R¾)	165	100:1	(130 mm with extension)		80						
1,5	G1B (R¾)	190	100:1			90						
2,5	G1B (R¾)	130	100:1			A0						
2,5	G1B (R¾)	190	100:1			B0						
3,5	G5/4B (R1)	260	100:1			D0						
6,0	G5/4B (R1)	260	100:1			F0						
6,0	DN25	260	100:1			G0						
10	G2B (R1½)	300	100:1			H0						
10	DN40	300	100:1			J0						
15	DN50	270	100:1			K0						
Meter type												
Heat meter (MID module B)							1					
Heat meter (MID modules B+D)							2					
Heat/cooling meter (MID modules B+D & TS TS27.02+DK268)*							3					
Heat meter (National approvals)							4					
Cooling meter (TS27.02+DK268)							5					
Heat/cooling meter (MID modules B+D & TS27.02+DK268)*							6					
Volume meter hot							7					
Volume meter cold							8					
Country code												
(See paragraph 3.3)								XX				
Sensor set (Pt500)		Length [mm]	Diameter ø [mm]	Cable length [m]								
No sensor set		-	-	-						00		
Direct short sensor set		27,5		1,5						51		
Direct short sensor set		27,5		3,0						52		
Direct short sensor set		38,0		1,5						21		
Direct short sensor set		38,0		3,0						22		
Direct sensor set with composite union nut			5,0	1,5						61		
Direct sensor set with composite union nut			5,0	3,0						62		
Direct sensor set with composite union nut			5,2	1,5						71		
Direct sensor set with composite union nut			5,2	3,0						72		
Pocket sensor set			5,8	1,5						81		
Pocket sensor set			5,8	3,0						82		
Pocket sensor set			6,0	1,5						91		
Pocket sensor set			6,0	3,0						92		
Supply												
No supply											0	
Battery, 1 x D-cell											2	
230 VAC High Power SMPS											3	
24 VAC/VDC High Power SMPS											4	
Battery, 1 x C-cell IoT											6	
230 VAC Supply											7	
24 VAC Supply											8	
Battery, 2 x A-cells											9	
Modules												
No module												00
Data + 2 pulse inputs (In-A, In-B)												10
Data + 2 pulse outputs (Out-C, Out-D)												11
M-Bus, inputs (In-A, In-B)												20
M-Bus, outputs (Out-C, Out-D)												21
M-Bus, Thermal Disconnect												22
Wireless M-Bus, inputs (In-A, In-B), 868 MHz												30
Wireless M-Bus, outputs (Out-C, Out-D), 868 MHz												31
linkIQ/wM-Bus, inputs (In-A, In-B), EU												32
linkIQ/wM-Bus, outputs (Out-C, Out-D), EU												33
wM-Bus, inputs (In-A, In-B), 912,5/915/918,5 MHz												34
Analog outputs 2 x 0/4...20 mA												40
KNX Connection												42
PQT Controller												43
Low Power Radio, inputs (In-A, In-B), 434 MHz												50
Low Power Radio GDPR, inputs (In-A, In-B), 434 MHz												51
LoRaWan (Elvaco), 868 MHz												53
NB IoT, inputs (In-A, In-B)												56
NB-IoT (Elvaco)												58
BACnet MS/TP, inputs (In-A, In-B)												66
Modbus RTU, inputs (In-A, In-B)												67
BACnet IP, inputs (In-A, In-B)												81
Modbus/KMP TCP/IP, inputs (In-A, In-B)												82
READy Ethernet, input (In-A, In-B)												83

* In some countries bi-functional meters type 3 and 6 are only allowed to be assigned with the MID marking, due to national law.

The flow sensors are type approved for dynamic ranges q_p:q_i = 250:1 and 100:1, but basically 100:1 is supplied. Please contact Kamstrup A/S for information on the availability of the above MULTICAL® 403 variants on the individual markets.

3.1.1 Accessories

Supply modules

Article number	Description
HC-993-02	Battery module with one D-cell
HC-993-03	230 VAC High Power supply module
HC-993-04	24 VAC/VDC High Power supply module
HC-993-06	Battery module with one C-cell IoT
HC-993-07	230 VAC supply module
HC-993-08	24 VAC supply module
HC-993-09	Battery module with two A-cells
6699-047	Supply label, 10 pcs. (2006-681)

Various accessories

Article number	Description
3026-517	Sealing cap for sensor, blue, 2 pcs.
3026-518	Sealing cap for sensor, red, 2 pcs.
3026-1330	Sealing cap for DS sensor and R½" nipple, grey, 2 pcs. per sensor
3026-1331	Sealing cap for DS sensor and R¾" nipple, grey, 2 pcs. per sensor
2105-002	Sealing cap G¾B (R½)
3026-1148	Sealing cap self locking G¾B (R½) coupling
3026-655.A	Wall bracket including mounting kit
3026-902	Bracket for mounting MULTICAL® 403 on MULTICAL® 402 wall bracket
3026-909	Holder for optical reading head
3026-961	Separation tool base
3026-962	Separation tool bracket
3130-262	Blind plug with o-ring
3130-269	Cable relief set
5000-337	Module cable 2 m (2 x 0,25 mm²)
6699-035	USB cable for module configuration
6699-042	Metal plate for optical reader 20 pcs.
6699-099	Optical read-out head with USB plug
6699-447.E	Internal antenna for Kamstrup radio, 434 MHz
6699-448	Mini Triangle antenna for Wireless M-Bus and 2G/4G Network Module
6699-482.E	Internal antenna for wM-Bus, 868 MHz

Calibration unit

Article number	Description
6699-366	Calibration unit for MC403, Pt500, Heat/Cooling (used with METERTOOL HCW)
6699-367	Calibration unit for MC403, Pt100, Heat/Cooling (used with METERTOOL HCW)

Software

Article number	Description
6699-724	METERTOOL HCW
6699-725	LogView HCW

Couplings

Article number	Description
6561-323	Coupling incl. gasket, DN15, G¾B - R½, 2 pcs
6561-324	Coupling incl. gasket, DN20, G1B - R¾, 2 pcs
6561-349	Coupling incl. gasket, DN25, G1¼B - R1, 2 pcs
6561-350	Coupling incl. gasket, DN32, G1½B - R1¼, 2 pcs
6561-351	Coupling incl. gasket, DN40, G2B - R1½, 2 pcs

Extensions

Article number	Description
1330-010	Extensions excl. gaskets, 110 - 165 mm/165 - 220 mm, G¾B - G1B, 1 item. *
1330-011	Extensions excl. gaskets, 190 - 220 mm, G1B - G1B, 1 pc.
1330-012	Extensions excl. gaskets, 110 - 220 mm, G¾B - G1B, 1 pc. *
1330-013	Extensions excl. gaskets, 110 - 130 mm, G¾B - G1B, 1 pc. *
1330-015	Extensions excl. gaskets, 110 - 130 mm, G¾B - G¾B, 1 pc.
1330-019	Extensions excl. gaskets, 110 - 165 mm, G¾B - G¾B, 1 pc.

** 2 pcs to be ordered per meter*

Sensor nipples and pockets

Article number	Description
6556-546	R½ nipple for direct short sensor
6556-547	R¾ nipple for direct short sensor
6557-440	R½ x 65 mm sensor pocket, ø5,8 mm
6557-441	R½ x 90 mm sensor pocket, ø5,8 mm
6557-442	R½ x 140 mm sensor pocket, ø5,8 mm

Ball valves

Article number	Description
6556-570	½” ball valve with M10 connection for direct temperature sensor
6556-571	¾” ball valve with M10 connection for direct temperature sensor
6556-572	1” ball valve with M10 connection for direct temperature sensor
6556-526	1¼” ball valve with M10 connection for direct temperature sensor
6556-527	1½” ball valve with M10 connection for direct temperature sensor

Gaskets

Article number	Description
2210-131	Gasket for direct short temperature sensor, 1 pc.
2210-061	Gasket for G¾B (R½) flow sensor (thread), 1 pc.
2210-062	Gasket for G1B (R¾) flow sensor (thread), 1 pc.
2210-063	Gasket for G1¼B (R1) flow sensor (thread), 1 pc.
2210-065	Gasket for G2B (R1½) flow sensor (thread), 1 pc.
2210-133	Gasket for DN25 PN25 flow sensor (flange), 1 pc.
2210-132	Gasket for DN40 PN25 flow sensor (flange), 1 pc.
2210-099	Gasket for DN50 PN25 flow sensor (flange), 1 pc.

Safety transformer

Article number	Description
6699-403	230/24 VAC safety transformer 5 VA
6699-404	230/24 VAC safety transformer 10 VA
6699-405	230/12/24 VAC safety transformer 63 VA

Contact Kamstrup A/S for questions about further accessories.

3.2 Configuration numbers

The software configuration of MULTICAL® 403 is defined on the basis of the configuration number. Below you see an overview of the meter's configuration number. Each part of the configuration number is described in more detail in the following paragraphs.

	A	-	B	-	CCC	-	DDD	-	EE	-	FF	-	GG	-	L	-	N	-	PP	-	RR	-	T	-	VVVV
Flow sensor position																									
Inlet	3																								
Outlet	4																								
Measuring unit																									
GJ			2																						
kWh			3																						
MWh			4																						
Flow sensor coding																									
(See paragraph 3.2.3)					CCC																				
Display																									
(See paragraph 3.2.4)							DDD																		
Tariffs																									
No active tariff									00																
Power tariff									11																
Flow tariff									12																
t1-t2 tariff									13																
Inlet tariff									14																
Outlet tariff									15																
Time controlled tariff									19																
Heat/cooling volume tariff									20																
PQ-tariff									21																
Pulse inputs A and B																									
(See paragraph 3.2.6)											FF		GG												
Integration mode																									
Adaptive mode (4-64 s.) (Display on)															1										
Normal mode (32 s.) (Display on)															2										
Fast mode (4 s.) (Display on)															3										
Adaptive mode (4-64 s.) (Display off)															5										
Normal mode (32 s.) (Display off)															6										
Fast mode (4 s.) (Display off)															7										
Cold water leak detection (inputs A and B)																									
OFF																	0								
30 min. without pulses																	1								
60 min. without pulses																	2								
120 min. without pulses																	3								
Pulse Transmitter/Divider																									
Out-C: V1/4 5 ms																			73						
Out-C: V1/1 3,9 ms																			82						
Out-C: V1/4 22 ms																			83						
Pulse outputs for count registers																									
E1 and V1 or E3 and V1 32 ms																			95						
E1 and V1 or E3 and V1 100 ms (0,1 s)																			96						
Controlled output based on data commands																									
Controlled output																			99						
Data logger profile [1]																									
(See paragraph 3.2.10)																					RR				
Encryption level																									
Common key																							2		
Individual key																							3		
Customer label																									
(See paragraph 3.2.12)																									XXXX

[1] For more data logger profiles, see document "Logger profiles and datagrams" at:
www.kamstrup.com/en-en/product-centre

3.2.1 Flow sensor position >A<

The **code A** indicates installation of flow sensor in inlet or outlet. As the density and heat capacity of water vary with temperature, the calculator must correct this based on the installation position (A-code). Incorrect programming or installation leads to error of measuring. Please see paragraphs 4.2 and 4.5 for further details on installation of flow sensor in inlet and outlet as far as heat and cooling installations are concerned.

Flow sensor position	A-code
Inlet	3
Outlet	4

3.2.2 Measuring unit >B<

The B-code indicates the measuring unit used in the energy register. The options are GJ, kWh or MWh.

Measuring unit	B-code
GJ	2
kWh	3
MWh	4

3.2.3 Flow sensor coding >CCC<

The CCC-code optimises the display resolution for the selected flow sensor size. At the same time the type approval regulations as to minimum resolution and maximum register overflow are observed. The CCC-codes are divided into three tables for standard resolution and high resolution respectively.

Standard CCC-codes with 7 digits

7 digits CCC-table for MULTICAL® 403 (standard)									
	Number of decimals in display								
CCC No.	kWh	MWh	GJ	m³	l/h	m³/h	kW	q_p (m³/h)	Type 403-xXXxxx-xxxxx
416	0	3	2	2	0	-	1	0,6	1x-3x
419	0	3	2	2	0	-	1	1,5	4x-5x-7x-8x-9x
498	0	3	2	2	0	-	1	2,5	Ax-Bx
451	-	2	1	1	0	-	1	3,5	Dx
437	-	2	1	1	0	-	1	6,0	Fx-Gx
478	-	2	1	1	0	-	1	10	Hx-Jx
420	-	2	1	1	0	-	1	15	Kx
490	-	1	0	0	0	-	1	15	Kx

CCC-codes with high resolution and 7 digits

If modules with pulse outputs are selected, high-resolution CCC-codes can reduce the battery lifetime. Please see paragraph 10.4 re the meter's battery lifetime.

7 digits CCC-table for MULTICAL® 403 (high resolution)									
	Number of decimals in display								
CCC No.	kWh	MWh	GJ	m³	l/h	m³/h	kW	q_p (m³/h)	Type 403-xXXxxx-xxxxx
484	1	-	3	3	0	-	1	0,6	1x-3x
407	1	-	3	3	0	-	1	1,5	4x-5x-7x-8x-9x
455	1	-	3	2	0	-	1	1,5	4x-5x-7x-8x-9x
454	1	-	3	3	0	-	1	2,5	Ax-Bx
459	1	-	3	2	0	-	1	2,5	Ax-Bx
436	0	3	2	2	0	-	1	3,5	Dx
438	0	3	2	2	0	-	1	6,0	Fx-Gx
483	0	3	2	2	0	-	1	10	Hx-Jx
485	0	3	2	2	0	-	1	15	Kx

CCC-codes with high resolution and 8 digits

8 digits CCC-table for MULTICAL® 403 (high resolution)									
	Number of decimals in display								
CCC No.	kWh	MWh	GJ	m³	l/h	m³/h	kW	q_p (m³/h)	Type 403-xXXxxx-xxxxx
584	1	-	3	3	0	-	1	0,6	1x-3x
507	1	-	3	3	0	-	1	1,5	4x-5x-7x-8x-9x
555	1	-	3	2	0	-	1	1,5	4x-5x-7x-8x-9x
598	1	-	3	3	0	-	1	2,5	Ax-Bx
559	1	-	3	2	0	-	1	2,5	Ax-Bx

The choice of 7 or 8 digits may influence the data communication

If the reading device has been hard coded to a given number of digits for the individual registers, there may occur errors in the data communication if you select, for example, 8 digits on the meter, while the reading device is hard coded to, for example, 7 digits.

This type of error most often occurs in systems in which meter and reading device use different communication types, e.g. a PLC system in which the communication to an M-Bus converter takes place via RS-232 and the communication to a MULTICAL® meter takes place via M-Bus. In case of suspicion that an error in the data communication is caused by this, it can be checked by changing the CCC code in MULTICAL® to a variant with another number of digits but of the same flow meter size.

To change the CCC code, an optical read-out head and METERTOOL are used.

3.2.4 Display code >DDD<

MULTICAL® 403 has 4 display loops; “USER loop”, “TECH loop”, “SETUP loop” and ”TEST loop”. ”TECH loop” includes all display readings and this loop is *not* configurable. ”USER loop”, however, is configurable, and can be adapted to customer requirements by means of the DDD-code (display code). ”USER loop” comprises the meter’s legal readings as a minimum.

The meter’s legal readings, e.g. energy and volume reading, are basically displayed as 7-digit values. The display readings can be configured to 8-digit values via the CCC-code. Please contact Kamstrup for further details.

The first digit of the three-digit DDD-code define the meter type comprised by the DDD-code in question. The table shows examples of a number of DDD-codes within each meter type. In the table, ”1” indicates the first primary reading, whereas e.g. ”1A” is the first secondary reading. The display automatically returns to reading ”1” after 4 minutes.

Contact Kamstrup A/S for information about available display codes.

Display ref.	Primary key	Display ref.	Secondary key	Heat meter DDD = 210	Heat/cooling meter DDD = 310	Heat meter DDD = 410	Cooling meter DDD = 510	Heat/cooling meter DDD = 610	Volume meter DDD = 710
1.0	Heat energy (E1)			1	1	1		1	
		1.1	*Date for yearly logger*	1A	1A	1A		1A	
		1.2	*Data for yearly logger [1]*						
		1.3	*Date for monthly logger*	1B	1B	1B		1B	
		1.4	*Data for monthly logger [1]*						
2.0	Cooling energy (E3)				2		1	2	
		2.1	*Date for yearly logger*		2A		1A	2A	
		2.2	*Data for yearly logger [1]*						
		2.3	*Date for monthly logger*		2B		1B	2B	
		2.4	*Data for monthly logger [1]*						
3.0	Volume			2	3	2	2	3	1
		3.1	*Date for yearly logger*	2A	3A	2A	2A	3A	1A
		3.2	*Data for yearly logger [1]*						
		3.3	*Date for monthly logger*	2B	3B	2B	2B	3B	1B
		3.4	*Data for monthly logger [1]*						
4.0	Hour counter			3	4	3	3	4	2
		4.1	*Error hour counter*	3A	4A	3A	3A	4A	2A
5.0	t1 (inlet)			4	5	4	4	5	3
		5.1	*Year-to-date average [2]*	4A	5A	4A	4A	5A	3A
		5.2	*Month-to-date average [2]*	4B	5B	4B	4B	5B	3B
6.0	t2 (outlet)			5	6	5	5	6	4
		6.1	*Year-to-date average [2]*	5A	6A	5A	5A	6A	4A
		6.2	*Month-to-date average [2]*	5B	6B	5B	5B	6B	4B
7.0	t1-t2 (ΔΘ) (Cooling indicated by -)			6	7	6	6	7	5
		7.1	*E8 (m^3xt1)*						
		7.2	*E9 (m^3xt2)*						

Display ref.	Primary key	Display ref.	Secondary key	Heat meter DDD = 210	Heat/cooling meter DDD = 310	Heat meter DDD = 410	Cooling meter DDD = 510	Heat/cooling meter DDD = 610	Volume meter DDD = 710
8.0	Flow (V1)			7	8	7	7	8	6
		8.1	*Date for max. this year* [3]	7A	8A	7A	7A	8A	6A
		8.2	*Data for max. this year* [1]						
		8.3	*Date for max yearly logger*						
		8.4	*Data for max yearly logger* [1]						
		8.5	*Date for max. this month* [3]	7B	8B	7B	7A	8B	6B
		8.6	*Data for max. this month* [1]						
		8.7	*Date for max. monthly logger*						
		8.8	*Data for max. monthly logger* [1]						
		8.9	*Date for min. this year* [3]		8C				
		8.10	*Data for min. this year* [1]						
		8.11	*Date for min. yearly logger*						
		8.12	*Data for min. yearly logger* [1]						
		8.13	*Date for min. this month* [3]		8D				
		8.14	*Data for min. this month* [1]						
		8.15	*Date for min. monthly logger*						
		8.16	*Data for min. monthly logger* [1]						
9.0	Thermal output (V1)			8	9	8	8	9	7
		9.1	*Date for max. this year* [3]	8A	9A	8A	8A	9A	7A
		9.2	*Data for max. this year* [1]						
		9.3	*Date for max. yearly logger*						
		9.4	*Data for max. yearly logger* [1]						
		9.5	*Date for max. this month* [3]	8B	9B	8B	8B	9B	7B
		9.6	*Data for max. this month* [1]						
		9.7	*Date for max monthly logger*						
		9.8	*Data for max monthly logger* [1]						
		9.9	*Date for min. this year* [3]		9C				
		9.10	*Data for min. this year* [1]						
		9.11	*Date for min. yearly logger*						
		9.12	*Data for min. yearly logger* [1]						
		9.13	*Date for min. this month* [3]		9D				
		9.14	*Data for min. this month* [1]						
		9.15	*Date for min. monthly logger*						
		9.16	*Data for min. monthly logger* [1]						
10.0	Input A [4]			9	10	9	9	10	8
		10.1	*Meter no. of Input A*	9A	10A	9A	9A	10A	8A
		10.2	*L/imp. of input A*	9B	10B	9B	9B	10B	8B
		10.3	*Date for yearly logger*	9C	10C	9C	9C	10C	8C
		10.4	*Data for yearly logger* [1]						
		10.5	*Date for monthly logger*	9D	10D	9D	9D	10D	8D
		10.6	*Data for monthly logger* [1]						

Display ref.	Primary key	Display ref.	Secondary key	Heat meter DDD = 210	Heat/cooling meter DDD = 310	Heat meter DDD = 410	Cooling meter DDD = 510	Heat/cooling meter DDD = 610	Volume meter DDD = 710
11.0	Input B [4]			10	11	10	10	11	9
		11.1	*Meter no. of Input B*	10A	11A	10A	10A	11A	9A
		11.2	*L/imp. or Wh/imp. of input B*	10B	11B	10B	10B	11B	9B
		11.3	*Date for yearly logger*	10C	11C	10C	10C	11C	9C
		11.4	*Data for yearly logger [1]*						
		11.5	*Date for monthly logger*	10D	11D	10D	10D	11D	9D
		11.6	*Data for monthly logger [1]*						
12.0	TA2			11	12	11	11	12	10
		12.1	*TL2*	11A	12A	11A	11A	12A	10A
13.0	TA3			12	13	12	12	13	11
		13.1	*TL3*	12A	13A	12A	12A	13A	11A
14.0	TA4			13	14	13	13	14	12
		14.1	*TL4*	13A	14A	13A	13A	14A	12A
15.0	Heat energy at a discount A1 (A-)								
		15.1	*Heat energy with an addition A2 (A+)*						
		15.2	*Outlet temperature reference t5*						
16.0	CP (moving average)								
		16.1	*Current power of input B [5]*						
		16.2	*Date for yearly logger*						
		16.3	*Data for yearly logger [1]*						
		16.4	*Date for monthly logger*						
		16.5	*Data for monthly logger [1]*						
17.0	Info Code			14	15	14	14	15	13
		17.1	*Info event counter*	14A	15A	14A	14A	15A	13A
		17.2	*Date for info logger*	14B	15B	14B	14B	15B	13B
		17.3	*Data for info logger*						
18.0	Customer number (Nº 1)			15	16	15	15	16	14
		18.1	*Customer number (Nº 2)*	15A	16A	15A	15A	16A	14A
		18.20	*Segment test*						

[1] *Depending on the selected depths of yearly and monthly logs in the programmable data logger these display readings can be empty.*

[2] *The average is volume based.*

[3] *Only the date of min/max is displayed in the format 20xx.xx.xx.* Serial reading includes the time (hh.mm) of the average value calculation too.

[4] *Inputs A and B are currently updated in the display of MULTICAL® 403, i.e. the display of the connected water or electricity meter* will be in accordance with the display of *MULTICAL® 403 without delay.*

[5] *The unit of this reading is fixed at kW.*

3.2.5 Tariffs >EE<

MULTICAL® 403 has 3 extra registers TA2, TA3 and TA4, which can accumulate heat energy or cooling energy (EE=20 accumulates volume) parallel with the main register based on pre-programmed tariff conditions (to be stated in the order). Irrespective of the selected tariff type the tariff registers are named TA2, TA3 and TA4 in the display.

As the main register is considered the legal billing register, it is accumulated no matter the selected tariff function. Tariff conditions TL2, TL3 and TL4 are monitored at all integrations. If the tariff conditions are fulfilled, consumed heat energy is accumulated in TA2, TA3 or TA parallel with the main register.

Example of power tariff (EE=11)

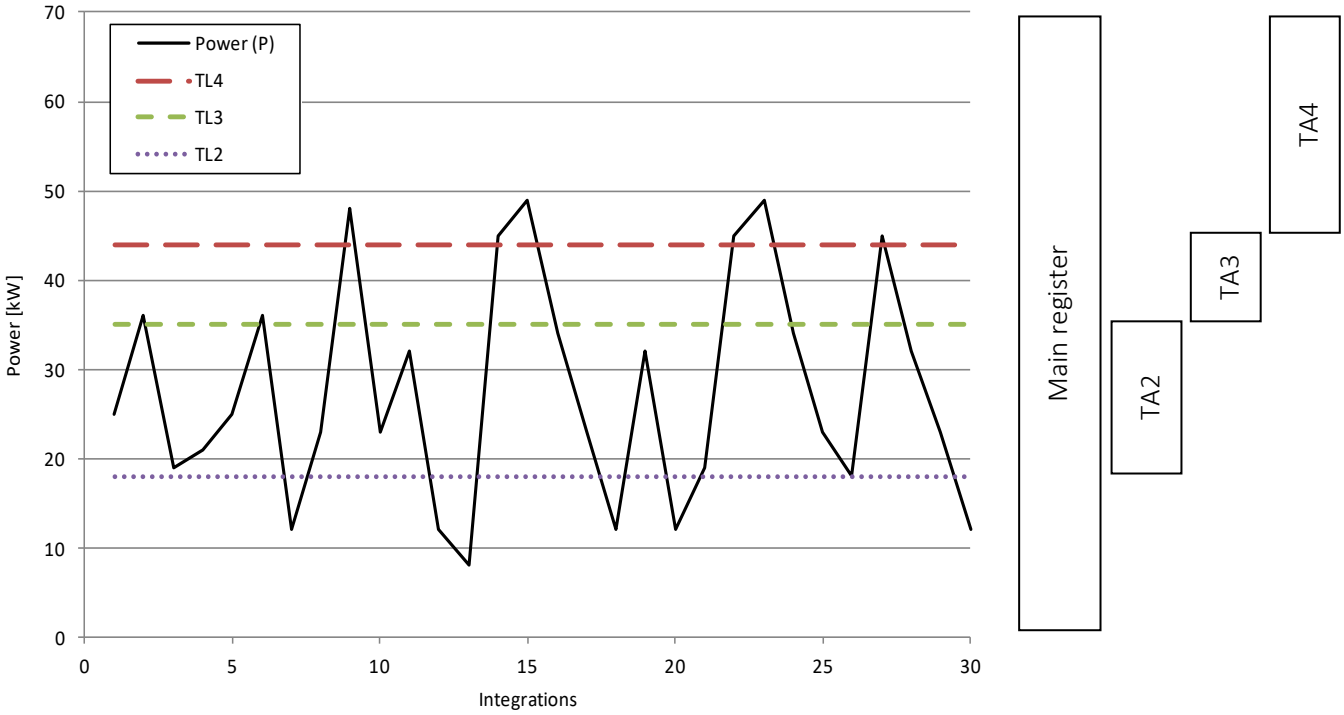

Three tariff conditions, TL2, TL3 and TL4, which are always used in the same tariff type, are connected to each tariff function. Therefore, it is not possible to “mix” 2 tariff types, except from the PQ-tariff (EE=21).

TA2 shows energy consumed…

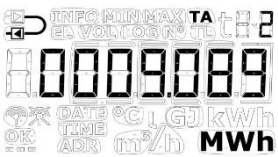

…above the power limit TL2

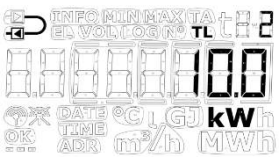

IMPORTANT: Out of consideration for backwards compatibility tariff register TA4 can be deactivated. Thus, the meter uses TA2 and TA3 only, and the tariff function works as in the previous model, MULTICAL® 402. TA4 is deactivated by setting the tariff limit TL4 at 0.

The below-mentioned table lists the tariff types, for which MULTICAL® 403 can be configured and shows the tariff types available for each meter type.

EE=	Tariff type	Function	**Heat meter** Meter type 2	**Heat/cooling meter** Meter type 3	**Heat meter** Meter type 4	**Cooling meter** Meter type 5	**Heat/cooling meter** Meter type 6	**Volume meter** Meter type 7
00	No active tariff	No function	•	•	•	•	•	•
11	Power tariff	Energy is accumulated in TA2, TA3 and TA4 on the basis of the power limits entered in TL2, TL3 and TL4	•		•	•		
12	Flow tariff	Energy is accumulated in TA2, TA3 and TA4 on the basis of the flow limits entered in TL2, TL3 and TL4	•		•	•		
13	t1-t2 tariff	Energy is accumulated in TA2, TA3 and TA4 on the basis of the Δt-limits entered in TL2, TL3 and TL4	•		•	•		
14	Inlet temperature tariff	Energy is accumulated in TA2, TA3 and TA4 on the basis of the tF-limits entered in TL2, TL3 and TL4	•		•	•		
15	Outlet temperature tariff	Energy is accumulated in TA2, TA3 and TA4 on the basis of the tR-limits entered in TL2, TL3 and TL4	•		•	•		
19	Time controlled tariff	TL2=Start time of TA2 TL3=Start time of TA3 TL4=Start time of TA4	•		•	•		
20	Heat/cooling volume tariff (TL2, TL3 and TL4 are not used)	Volume (V1) is divided into TA2 for heat (t1>t2) and TA3 for cooling (t1<t2). For heat/cooling meters, meter types 3 and 6, the energy accumulation also depends on $\Theta_{HC.}$ (TA4 is not used in this tariff type).		•			•	•
21	PQ-tariff	Energy is saved in TA2 if P>TL2 and energy in TA3 if Q>TL3	•		•	•		

EE=00 No active tariff

If no tariff function is required, you select the set-up EE=00.

The tariff function can, however, at a later stage be activated through reconfiguration via METERTOOL HCW. See Technical description for METERTOOL HCW (5512-2097).

EE=11 Power controlled tariff

If the current power (P) exceeds TL2 but is lower than or equal to TL3, energy is counted in TA2 parallel to the main register. If the current power exceeds TL3 but is lower than or equal to TL4, energy is counted in TA3 parallel to the main register. If the current power exceeds TL4, energy is counted in TA4 parallel to the main register.

P ≤ TL2	Accumulation in main register only
TL3 ≥ P > TL2	Accumulation in TA2 and main register
TL4 ≥ P > TL3	Accumulation in TA3 and main register
P > TL4	Accumulation in TA4 and main register

TL4 > TL3 > TL2

Setting up data, TL3 must be higher than TL2 and TL4 must be higher than TL3.

The power controlled tariff is e.g. used as a basis for the individual heat consumer's connection fee. Furthermore, this tariff type can provide valuable statistical data if the heating station considers new construction activities.

EE=12 Flow controlled tariff

If the current water flow (Q) exceeds TL2 but is lower than or equal to TL3, energy is counted in TA2 parallel to the main register. If the current water flow exceeds TL3 but is lower than or equal to TL4, energy is counted in TA3 parallel to the main register. If the current water flow exceeds TL4, energy is counted in TA4 parallel to the main register.

Q ≤ TL2	Accumulation in main register only	TL4 > TL3 > TL2
TL3 ≥ Q > TL2	Accumulation in TA2 and main register	
TL4 ≥ Q > TL3	Accumulation in TA3 and main register	
Q > TL4	Accumulation in TA4 and main register	

Setting up data, TL3 must be higher than TL2 and TL4 must be higher than TL3.

The flow controlled tariff is e.g. used as a basis for the individual heat consumer's connection fee. Furthermore, this tariff type can provide valuable statistical data if the heating station considers new construction activities.

When either power or flow tariff is used you obtain an overview of the total consumption compared to the part of the consumption used above tariff limits.

EE=13 t1-t2 tariff (ΔΘ)

If the current t1-t2 (ΔΘ) is lower than TL2 but exceeds or is equal to TL3, heat energy is counted in TA2 parallel to the main register. If the current cooling becomes lower than TL3 but is higher than or equal to TL4, energy is counted in TA3 parallel to the main register. If the current t1-t2 (ΔΘ) is lower than TL4, energy is counted in TA4 parallel to the main register.

ΔΘ ≥ TL2	Accumulation in main register only	TL4 < TL3 < TL2
TL3 ≤ ΔΘ < TL2	Accumulation in TA2 and main register	
TL4 ≤ ΔΘ < TL3	Accumulation in TA3 and main register	
ΔΘ < TL4	Accumulation in TA4 and main register	

Setting up tariff limits, TL3 must be lower than TL2 and TL4 must be lower than TL3.

The t1-t2 tariff can be used as a basis for weighted user charge. Low ΔΘ (small difference between inlet and outlet temperatures) is uneconomical for the heat supplier.

EE=14 Inlet temperature tariff

If the current inlet temperature (t1) exceeds TL2 but is lower than or equal to TL3, energy is counted in TA2 parallel to the main register. If the current inlet temperature exceeds TL3 but is lower than or equal to TL4, energy is counted in TA3 parallel to the main register. If the current inlet temperature exceeds TL4, energy is counted in TA4 parallel to the main register.

t1 ≤ TL2	Accumulation in main register only	TL4 > TL3 > TL2
TL3 ≥ t1 > TL2	Accumulation in TA2 and main register	
TL4 ≥ t1 > TL3	Accumulation in TA3 and main register	
t1 > TL4	Accumulation in TA4 and main register	

Setting up data, TL3 must be higher than TL2 and TL4 must be higher than TL3.

The inlet temperature tariff can be used as a basis for billing consumers who are guaranteed a certain inlet temperature. If the “guaranteed” minimum temperature is entered in TL4, the payable consumption is accumulated in TA4.

EE=15 Outlet temperature tariff

If the current outlet temperature (t2) exceeds TL2 but is lower than or equal to TL3, energy is counted in TA2 parallel to the main register. If the current outlet temperature exceeds TL3 but is lower than or equal to TL4, energy is counted in TA3 parallel to the main register. If the current outlet temperature exceeds TL4, energy is counted in TA4 parallel to the main register.

t2 ≤ TL2	Accumulation in main register only	TL4 > TL3 > TL2
TL3 ≥ t2 > TL2	Accumulation in TA2 and main register	
TL4 ≥ t2 > TL3	Accumulation in TA3 and main register	
t2 > TL4	Accumulation in TA4 and main register	

Setting up data, TL3 must be higher than TL2 and TL4 must be higher than TL3.

The outlet temperature tariff can be used as a basis for weighted user charge. A high outlet temperature indicates insufficient heat utilization which is uneconomical for the heat supplier.

EE=19 Time-controlled tariff

The time-controlled tariff is used for time division of heat consumption. If TL2 = 08:00, TL3 = 16:00 and TL4=23:00, the daily consumption from 08:00 a.m. until 15:59 p.m. is accumulated in TA2, whereas the consumption during the evening from 16:00 p.m. until 22:59 p.m. is accumulated in TA3 and the consumption during the night from 23:00 p.m. until 07:59 a.m. is accumulated in TA4.

TL2 must include fewer hours than TL3 and TL3 must include fewer hours than TL4.

From and incl. TL2 to TL3	Accumulation in TA2 and main register	TL3 must follow TL2 TL4 must follow TL3
From and incl. TL3 to TL4	Accumulation in TA3 and main register	
From and incl. TL4 to TL2	Accumulation in TA4 and main register	

The time tariff is suitable for billing in housing areas close to industrial areas with large district heating consumption, as well as for billing industrial customers.

EE=20 Heat/cooling volume tariff

The heat/cooling volume tariff is used to divide volume into heat and cooling consumption in bifunctiona heat/cooling meters, i.e. the tariff divides the consumed volume into heat and cooling volume. The total volume is accumulated in the register V1, whereas TA2 accumulates the volume consumed together with E1 (heat energy) and TA3 accumulates the volume consumed together with E3 (cooling energy).

EE=20 only functions in heat/cooling meters, meter types 3 and 6.

(TA4 is not used in this tariff type).

$t1 > t2$ and $t1 \geq \theta_{hc}$	Volume is accumulated in TA2 and V1 (heat energy)	TL2 and TL3 are not used
$t1 > t2$ and $t1 \leq \theta_{hc}$	Volume is accumulated in V1 only	
$t2 > t1$ and $t1 \leq \theta_{hc}$	Volume is accumulated in TA3 and V1 (cooling energy)	
$t2 > t1$ and $t1 \geq \theta_{hc}$	Volume is accumulated in V1 only	
$t1 = t2$ and $t1 \geq \theta_{hc}$	Volume is accumulated in V1 only, no counting in energy registers	
$t1 = t2$ and $t1 \leq \theta_{hc}$	Volume is accumulated in V1 only, no counting in energy registers	

EE=21 PQ tariff

The PQ tariff is a combined power and flow tariff. TA2 functions as power tariff and TA3 functions as flow tariff.

$P \leq TL2$ and $Q \leq TL3$	Accumulation in main register only	TL2 = power limit (P) TL3 = flow limit (Q)
$P > TL2$	Accumulation in TA2 and main register	
$Q > TL3$	Accumulation in TA3 and main register	
$P > TL2$ and $Q > TL3$	Accumulation in TA2, TA3 and main register	

The PQ tariff can e.g. be used for customers who pay a fixed charge based on max. power and max. flow. (TL4 and TA4 are not used in this tariff type).

3.2.6 Pulse inputs A and B >FF-GG<

MULTICAL® 403 has 2 extra pulse inputs (A and B) which are placed on the communication modules (see paragraph 11 for further details on modules). The pulse inputs are used for acquisition and remote accumulation of pulses from e.g. mechanical water meters and electricity meters. The pulse inputs function independently of the meter itself. Therefore, they are not included in any energy calculation. The constructions of the two pulse inputs are identical and can be individually set up to receive pulses from water meters or electricity meters.

All modules with Pulse inputs are clearly marked with this.

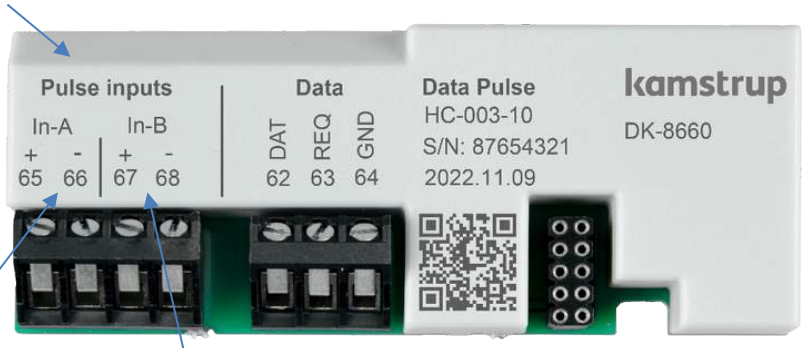

Terminals for In- A and terminals for In-B are marked as well.

See chapter 11.2 for more details about the available modules.

MULTICAL® 403 registers the accumulated consumption of the meters connected to inputs A and B and saves the counter values every month and every year on target date. The number of these yearly and monthly loggings depends on the selected logger profile (RR-code). Read more about data logger profiles in paragraph 3.2.10. In order to make identification easier during data reading, the meter numbers of the two meters connected to inputs A and B can be saved too. The meter numbers can be programmed into the meter in ”SETUP loop” or via METERTOOL HCW.

Two alarm types are connected to the pulse inputs, cold water leakage and external alarm respectively. Unless otherwise informed by the customer, the meter is by default prepared for external alarm on both inputs from the factory, but only with active leakage alarm on input A (like in MC402). Please contact Kamstrup A/S should you need leakage alarm possibility on input B. Read more about cold water leakage in paragraph 3.2.8 and more about info codes in paragraph 7.7.

Below the specifications of pulse duration and pulse frequency for meters connected to pulse inputs:

Pulse inputs A and B	Electronic switch	Reed contact
Pulse input	680 kΩ pull-up to 3,6 V	680 kΩ pull-up to 3,6 V
Pulse ON	< 0,4 V i > 30 ms	< 0,4 V i > 500 ms
Pulse OFF	> 2,5 V i > 30 ms	> 2,5 V i > 500 ms
Pulse frequency	< 3 Hz	< 1 Hz
Electrical isolation	No	No
Max. cable length	25 m	25 m
Requirements to ext. contact	Leak current at function open < 1 µA	

The pulse inputs are placed on the module with the following connection terminal numbering:

		Additional meter	MULTICAL® 403
Input A:	Connection terminals 65-66	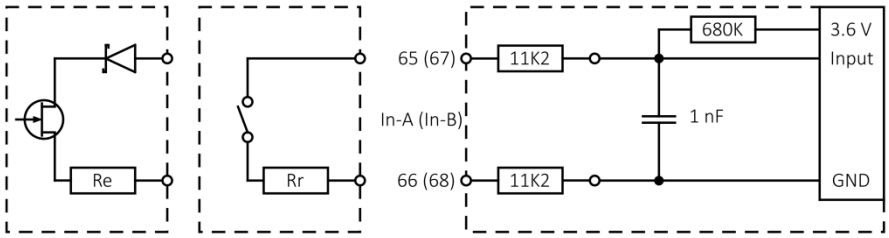	
Input B:	Connection terminals 67-68		

The pulse inputs are configured as a part of the meter's configuration number via the FF- and GG-codes. Upon receipt of order the FF- and GG-codes are configured at 24 by default (unless otherwise informed by the customer). Valid FF- and GG-codes appear from the table below. The default code 24 is marked in green. The FF- and GG-codes can be reconfigured by means of the PC-program METERTOOL HCW. See Technical description for METERTOOL HCW (5512-2097).

Input A		Input B						
FF-code	Max. flow water meter	GG-code	Max. flow water meter	Pre-counter[1]	Wh/imp	l/imp	Measuring unit and decimal position	
01	100 m³/h	01	100 m³/h	1	-	100	vol A/vol b (m³)	000000,0
02	50 m³/h	02	50 m³/h	2	-	50	vol A/vol b (m³)	000000,0
03	25 m³/h	03	25 m³/h	4	-	25	vol A/vol b (m³)	000000,0
04	10 m³/h	04	10 m³/h	10	-	10	vol A/vol b (m³)	000000,0
05	5 m³/h	05	5 m³/h	20	-	5	vol A/vol b (m³)	000000,0
06	2,5 m³/h	06	2,5 m³/h	40	-	2,5	vol A/vol b (m³)	000000,0
07	1 m³/h	07	1 m³/h	100	-	1	vol A/vol b (m³)	000000,0
24	10 m³/h	24	10 m³/h	1	-	10	vol A/vol b (m³)	00000,00
25	5 m³/h	25	5 m³/h	2	-	5	vol A/vol b (m³)	00000,00
26	2,5 m³/h	26	2,5 m³/h	4	-	2,5	vol A/vol b (m³)	00000,00
27	1 m³/h	27	1 m³/h	10	-	1	vol A/vol b (m³)	00000,00
40	1000 m³/h	40	1000 m³/h	1	-	1000	vol A/vol b (m³)	0000000
		GG-code	Max. power Electricity meter	Pre-counter[1]	Wh/imp	l/imp	Measuring unit and decimal place	
		50	2500 kW	1	1000	-	EL A/EL b (kWh)	0000000
		51	150 kW	60	16,67	-	EL A/EL b (kWh)	0000000
		52	120 kW	75	13,33	-	EL A/EL b (kWh)	0000000
		53	75 kW	120	8,333	-	EL A/EL b (kWh)	0000000
		54	30 kW	240	4,167	-	EL A/EL b (kWh)	0000000
		55	25 kW	340	2,941	-	EL A/EL b (kWh)	0000000
		56	20 kW	480	2,083	-	EL A/EL b (kWh)	0000000
		57	15 kW	600	1,667	-	EL A/EL b (kWh)	0000000
		58	7,5 kW	1000	1	-	EL A/EL b (kWh)	0000000
		59	750 kW	10	100	-	EL A/EL b (kWh)	0000000
		60	2500 kW	2	500	-	EL A/EL b (kWh)	0000000
		61	75 kW	100	10	-	EL A/EL b (kWh)	0000000
		62	15 kW	500	2	-	EL A/EL b (kWh)	0000000
		70	25000 kW	1	10000	-	EL A/EL b (MWh)	00000.00
Inputs for external alarm:								
98		98		External alarm input; Alarm=LO (normally open)				
99		99		External alarm input; Alarm=HI (normally closed)				

[1] **Note:** Pre-counter is the needed number of pulses to increment the display.

The registers which are connected to the pulse inputs can be read in the meter's "TECH loop", in "USER loop" (depending on selected DDD-code) and via data communication. Further, it is possible to pre-set the counter values of the two pulse inputs at the values of the connected meters at the time of commissioning. This can either be done via the meter's "SETUP loop" or via METERTOOL HCW.

Input A	
Meter count	
Meter No. A	
L/imp. of A	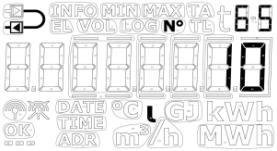
Yearly date	
Yearly data	
Monthly date	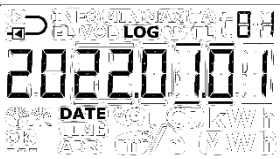
Monthly data	

Input B	
Meter count	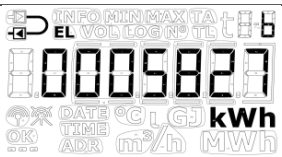
Meter No. B	
Wh/imp. of B	
Yearly date	
Yearly data	
Monthly date	
Monthly data	

3.2.7 Integration mode >L<

MULTICAL® 403 uses time-based integration, which means that accumulated volume and energy are calculated at fixed or variable time intervals. The time interval is configurable via the L-code and independent of the water flow. Please be aware that the choice of integration mode in combination with the selected communication module and battery type defines the meter's battery lifetime. Please see paragraph 10.4 re the meter's battery lifetime.

The meter has six optional integration modes; three modes, in which the meter's display remains switched on and three modes, in which the meter's display is switched off 8 min. after the latest registered activation of a key. During periods with the display switched off a dot flashes (heart beat indication) at intervals of 30 s to indicate that the meter is active.

Note: L-code selections, if any, are configured via the meter's country code.

	L-code	
Integration mode	Display on	Display off
Adaptive mode (4-64 s)	1	5
Normal mode (32 s)	2	6
Fast mode (4 s)	3	7

Note: Activating a key on the display changes the time interval to 4 seconds regardless of integration mode.
4 minutes after the latest registration of a key, the time interval returns to the interval based on the integration mode.

Adaptive mode (4-64 s)

Adaptive mode is the meter's intelligent integration mode, in which the time interval is currently adjusted. This mode combines the long battery lifetime obtained in "Normal mode" with the high measuring and calculation resolution obtained in "Fast mode".

When the system is stable, i.e. runs at stable flow and power, the meter will use the time interval of 64 s. MULTICAL® 403 currently measures if there are changes in flow and power. If so, the time interval is reduced to 4 s, which means that the meter calculates volume and energy every four seconds. Thereby higher resolution and higher precision are obtained during periods with changes in the system.

When the system is stable again, the meter gradually returns to the 64 s. interval. MULTICAL® 403 reacts quickly to changes in the system by reducing the time interval to 4 seconds; however, it gradually returns to the time interval of 64 s. as the system becomes stable.

Thus, in adaptive mode MULTICAL® 403 measures at high resolution during periods with changes in the system and in which accurate measurements are required and saves battery power during stable periods.

Adaptive mode is recommended for all systems including those with tap water exchanger. According to EN 1434-1, it is, however, recommended to use a meter with a constantly high reaction speed such as "Fast mode".

Normal mode (32 s)

In normal mode the integration interval is set at 32 seconds, which means that the meter calculates accumulated volume and energy every 32 seconds.

Normal mode is recommended for systems with hot water tank and similar systems.

Fast mode (4 s)

In fast mode the integration interval is set at 4 seconds, which means that the meter calculates accumulated volume and energy every 4 seconds.

Fast mode is recommended for all systems including those with tap water exchanger. Fast mode (4 s) meets the requirements for "Fast response meter" in EN 1434.

3.2.8 Cold water leakage >N<

Pulse inputs A and B of MULTICAL® 403 can be used for cold water leakage monitoring. Basically, however, cold water leakage monitoring is only active on input A, unless otherwise agreed with the customer. When MULTICAL® 403 is used for leak monitoring; the sensitivity is determined by the configuration of the N-code.

Leakage monitoring is measured over a period of 24 hours. The N-code defines the resolution, by which the 24 hours are divided; 48 intervals of half an hour, 24 intervals of one hour or 12 intervals of two hours. If the meter registers minimum one pulse during each of these intervals over the full period, info code 8, which indicates leakage, is activated. The info code is not activated until after the 24-hour period, however it is reset again as soon as the meter registers an interval without pulses.

The table below shows the three available N-codes. Upon receipt of order the N-code is configured at 2 by default (unless otherwise informed by the customer).

Cold water leak detection (input A)	N-code
No active leak search	0
30 min. without pulses	1
One hour without pulses	2
Two hours without pulses	3

3.2.9 Pulse outputs C and D >PP<

MULTICAL® 403 has 2 pulse outputs (C and D) which are placed on the communication modules (see paragraph 11 for further details on modules). The pulse outputs provide output from selected counter registers, which are determined by the selected meter type. As the meter has two pulse outputs, it is possible to provide output from two of the following counter registers via pulse outputs C and D respectively:

- E1 (Heat energy)
- E3 (Cooling energy)
- V1 (Volume)

Note: As selected counter registers are configured by meter type, configuration *cannot* be changed after delivery.

Pulse outputs are by default configured with the following registers:

Meter type	Out-C	Out-D
Heat meter	E1 (CE+)	V1 (CV)
Heat/cooling meter	E1 (CE+)	E3 (CE-)
Cooling meter	E3 (CE-)	V1 (CV)
Volume meter	V1 (CV)	V1 (CV)

Meter type (See paragraph 3.1)
1, 2, 4
3, 6
5
7, 8

The resolutions of pulse outputs always follow the least significant digit in the display, which is determined by the CCC-code (see paragraph 3.2.3) e.g. at CCC=419: 1 pulse/kWh and 1 pulse/0,01 m^3.

All modules with pulse outputs are clearly marked with this.

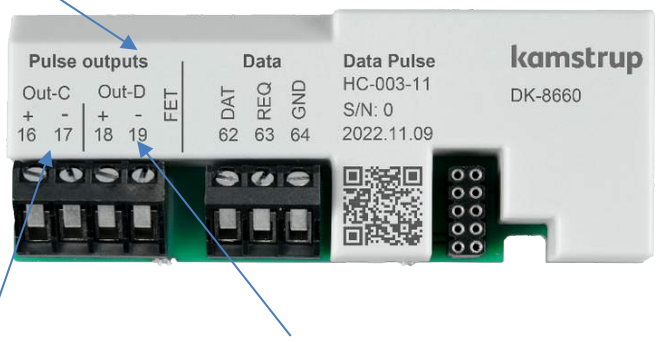

Terminals for Out- C and terminals for Out-D are marked as well.

See chapter 11.2 for more details about the available modules.

Technical data for Pulse outputs

Output type	Opto FET
External voltage	1…48 VDC/AC
Current	< 50 mA
On-Resistance	≤ 40 Ω
Isolation voltage	2 kV
Max. cable length	25 m

Please note the polarity when making the connection.
The pulse outputs are placed on the module with the following connection terminal numbering:

		Opto FET
Pulse output C:	Terminals 16-17	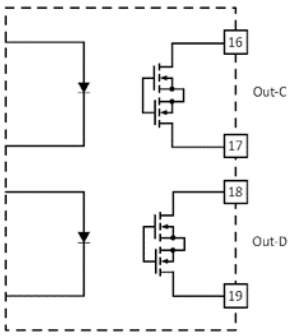
Pulse output D:	Terminals 18-19	

Note. For specifications on previous versions of pulse outputs, see "Electrical Data" in section 2.2.

The pulse duration of the pulse outputs is configured as part of the meter's configuration number via the PP-code. Upon receipt of order the PP-code is configured at 95 by default (unless otherwise requested by the customer). The pulse duration can be configured when submitting the order. Valid PP-codes appear from the table below. The default code 95 is marked in green. The PP-code can be reconfigured by means of the PC-program METERTOOL HCW. See "Technical description for METERTOOL HCW (5512-2097)".

Pulse Transmitter/Divider		PP-code
Out-C: V1/4	5 ms	73
Out-C: V1/1	3,9 ms	82
Out-C: V1/4	22 ms	83
Pulse outputs for count registers		
E1 and V1 or E3 and V1	32 ms	95
E1 and V1 or E3 and V1	100 ms (0,1 s)	96
Controlled output based on data commands		
Controlled output		99

Controlled output

The meter can be configured for data command control of pulse outputs. If controlled output is required, the PP-code is to be configured at 99. During the configuration connected external equipment can switch the meter's outputs C and D OFF (open optotransistor output) and ON (closed optotransistor output) respectively via KMP data commands.

Output status can be read via the KMP-registers. After a power-on reset the outputs will have the same status as before the power interruption as every change of status is saved in the meter's EEPROM.

3.2.10 Data logger profile >RR<

MULTICAL® 403 has a permanent memory (EEPROM), in which the results from various data loggers are saved. The data logger is programmable. The required data logger profile is selected via the RR-code of the configuration number. Unless otherwise stated by the customer, the RR-code is set at 30, which is the default data logger profile. If data logging of other registers, different intervals and logging depths are required, data logging profiles can be composed to match individual requirements. The programmable data logger includes the following six data loggers:

- Yearly logger
- Monthly logger
- Daily logger
- Hourly logger
- Minute logger1
- Minute logger2

If the data logger profile is changed to another profile after commissioning of the meter, the saved logged values are deleted from the meter.

Data logger registers and logging depth are both programmable, and individual logging profiles can be prepared as required by the customer. The table on the next page shows an example of a logging profile (RR code = 30), which is based on but not identical to the logger in MULTICAL® 602.

	Log type	Year	Month	Day	Hour	Minute 1	Minute 2
	Logger on display	-	-	-	-	15m	1m
	Logger depth	20	36	460	72	96	360
Date (YY.MM.DD)	Year, month and day of logging time	x	x	x	x	x	x
Clock (hh.mm.ss)	Time	x	x	x	x	x	x
Heat energy E1	E1 = V1(t1-t2)k Heat energy	X	X	X	X	X	X
Cooling energy E3	E3 = V1(t2-t1)k Cooling energy	X	X	X	X	X	X
Energy E8	E8 = m3 x t1 (inlet)	X	X	X	X	X	X
Energy E9	E9 = m3 x t2 (outlet)	X	X	X	X	X	X
Heat energy A1	Heat with discount	X	X	X	X	X	X
Heat energy A2	Heat with surcharge	X	X	X	X	X	X
Tariff TA2	Tariff register 2	X	X	X	X	X	X
Tariff TA3	Tariff register 3	X	X	X	X	X	X
Tariff TA4	Tariff register 4	X	X	X	X	X	X
Volume V1	Volume 1	X	X	X	X	X	X
Pulse input A1	Extra water meter connected to Input A1	X	X	X	X	X	X
Pulse input B1	Extra water or electricity meter connected to Input B1	X	X	X	X	X	X
Info bits	Information code	X	X	X	X	X	X
Flow V1 max year date	Date stamp for max. Flow V1 during year	X					
Flow V1 max year	Value for max. Flow V1 during year	X					
Flow V1 min year date	Date stamp for min. Flow V1 during year	X					
Flow V1 min year	Value for min. Flow V1 during year	X					
Power max year date	Date stamp for max. effect during year	X					
Power max year	Value for max. effect during year	X					
Power min year date	Date stamp for min. effect during year	X					
Power min year	Value for min. effect during year	X					
Flow V1 max month date	Date stamp for max. Flow V1 during month		X				
Flow V1 max month	Value for max. Flow V1 this month		X				
Flow V1 min month date	Date stamp for min. Flow V1 during month		X				
Flow V1 min month	Value for min. Flow V1 this month		X				
Power max month date	Date stamp for max. effect during month		X				
Power max month	Value for max. effect during month		X				
Power min month date	Date stamp for min. effect during month		X				
Power min month	Value for min. effect during month		X				
t1 time average day	Time based average (day) for t1			X			
t2 time average day	Time based average (day) for t2			X			
t1 time average hour	Time based average (hour) for t1				X		
t2 time average hour	Time based average (hour) for t2				X		
Operating hours	Hour counter	X	X	X	X	X	X
Error hour counter	Error hour counter	X	X	X	X	X	X
t1 actual (2 decimals)	Current value for t1		X	X	X	X	X
t2 actual (2 decimals)	Current value for t2		X	X	X	X	X
t1_t2 diff. temp. (2 dec.)	Current differential value		X	X	X	X	X
Flow V1 actual	Current water flow for V1		X	X	X	X	X
Power E1/E3 actual	Current power		X	X	X	X	X
COP year	Coefficient Of Performance, year	X					

3.2.11 Encryption level >T<

MULTICAL® 403 must be ordered with encrypted data transmission between module and reading system. Data is encrypted with 128 bit AES counter mode encryption. Data transmission can be encrypted with either a common or an individual encryption key.

If you choose individual encryption key (T-code 3) the reading system must know the encryption key of each meter in order to read the meter. The encryption key is sent to the customer and then ”matched” with the serial number of the individual meter in the reading system.

If you choose common encryption key (T-code 2) the key can be used for reading a customer specific number of meters. The key is created by Kamstrup A/S. A customer can have several encryption keys, e.g. one for each meter type.

Note: Due to GDPR, the common encryption key is **no longer** provided.

The encryption level is configured as part of the meter’s configuration number via the T-code. Upon receipt of order the T-code is by default configured at 3 - individual encryption key (unless otherwise informed by the customer). The encryption level can be configured when submitting the order. The encryption level cannot be changed after delivery.

Encryption level	T-code
Encryption with common key (customer specific)	2
Encryption with individual key	3

Encryption keys can be downloaded from Kamstrup’s customer portal ”My Kamstrup” at www.kamstrup.com.
Encryption keys are automatically entered in USB Meter Reader and READy.

3.2.12 Customer label >VVVV<

A 20x50 mm customer label can be printed on the meter’s front. The customer label to be printed on the meter’ front is determined by the VVVV-code. The customer label can show utility logo, a bar code or the like. By default the meter’s serial number is written in the customer label field.

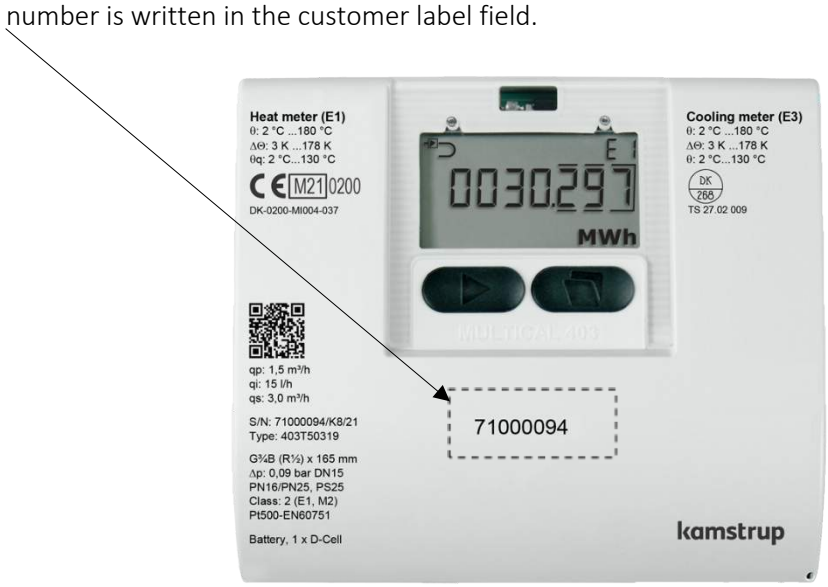

Please contact Kamstrup A/S for information on possible customer labels as well as regarding the creation of a new customer label.

3.3 Data

The country code is selected as the last two characters of the meter's static part of the type number.

					Static data		*Dynamic data*		
					403-XXXXXX	-	XXXXX		
		Written on meter front					Can be displayed		
Type 403-		□	□□	□	□□		□□	□	□□
Country code					XX				

In addition to being used to define the language on the meter label the country code is used to control the configuration of certain meter data.

During production of MULTICAL® 403 it is programmed with a number of measuring values in the fields listed overleaf. Unless the order includes specific requirements as to configuration, MULTICAL® 403 will be supplied with the default values listed in the table.

	Automatic	To be stated in order	Standard / Default
Serial no. (S/N) [1] (See paragraph 3.4)	71.xxx.xxx	-	-
Customer no. Display No. 1 = 8 digits MSD Display No. 2 = 8 digits LSD	-	Up to 16 digits	Customer no. equal to S/N
Yearly target date 1 (MM.DD)	-	MM=1-12 and DD=1-31	Depend on country code
Monthly target date 1 (DD)	-	DD = 1-31	
Yearly target date 2 (MM.DD)	-	MM=1-12 and DD=1-31 + 00,00 (disabled) [2]	
Monthly target date 2 (DD)	-	DD = 1-31 + 00 (disabled) [2]	
Averaging period for min./max. of power (P) and flow (Q) (See paragraph 7.5)	-	1…1440 min.	60 min.
Averaging period of CP (See paragraph 7.2)	-	5…30 days	7 days
θ_{hc} Heat/cooling shift Only active if meter type 6 is selected (See paragraph 7.4)	-	2…180,00 °C + 250,00 °C [3]	Heat/cooling, meter type 6: 25,00 °C
Date/time	20YY.MM.DD/ hh.mm.ss	GMT ± 12,0 hours (can be defined at half hour intervals)	-
GMT offset	-	-	Depends on country code
Primary address for M-Bus[4], Modbus and BACnet	-	Address 0-250 (depending on module)	Last 2-3 digits of customer number
M-Bus ID-No. (used for secondary address)	-	-	Customer no.
wM-Bus ID-no.	-	-	Serial number

	Automatic	To be stated in order	Standard / Default
Offset of t1 and t2 (± 0.99K) [4] (See paragraph 7.3)	To be entered on the basis of R_0 of the sensor element as well as the cable resistance. If no sensor data are available, offset is set at 0,00 K.	-	-
t2 preset Only active if meter type 4 is selected.	-	0,01…185,00 °C + 250,00 °C	250,00 °C
t5 preset Only relevant for meter types 1 and 2. (See paragraph 7.1.3)	-	0,01…185,00 °C	50,00 °C
DST (Daylight Saving Time) (See paragraph 7.10)	-	Enabled / Disabled	Depends on country code

[1] *Serial no. (Factory set unique serial number) is written on the meter, and cannot be changed after factory programming.*

[2] *If yearly target date 2 (MM.DD) and monthly target date (DD) are set at 00.00 and 00 respectively, these target dates are disabled and the meter only uses yearly target date 1 and monthly target date 1.*

[3] θ_{hc} = 250,00 °C *switches off the function. In all other meter types than 6,* θ_{hc} *is disabled and cannot be enabled after delivery.*

[4] *At submission of order you can choose "fixed M-Bus address" which means that all meters included in the order will be configured with the same primary M-Bus address.*

[5] R_0 *is the resistance value of the sensor element in ohm (Ω) at 0 °C.*

3.4 Serial number and extended availability

The serial number consists of 8 digits (**xxxxxxxx**/WW/yy), a two-digit device code for extended availability (xxxxxxxx/**WW**/yy) as well as the production year (xxxxxxxx/WW/**yy**). Serial no. (factory set unique serial number) is written on the meter and cannot be changed after factory programming.

Extended Availability

You need the encryption key of a specific meter to be able to read the meter via wireless M-Bus. This encryption key can be retrieved directly from "My Kamstrup" on Kamstrup's website. For customers who buy meters from wholesalers, the encryption keys can likewise be retrieved directly from "My Kamstrup" where the customer can create a user profile without contacting Kamstrup A/S. Next, the customer enters the meter's serial number as well as the two digits (device code) for extended availability and downloads the encryption key. The two digits have been introduced in order to provide a secure method for customers who buy Kamstrup meters from a wholesaler to obtain the necessary encryption keys.

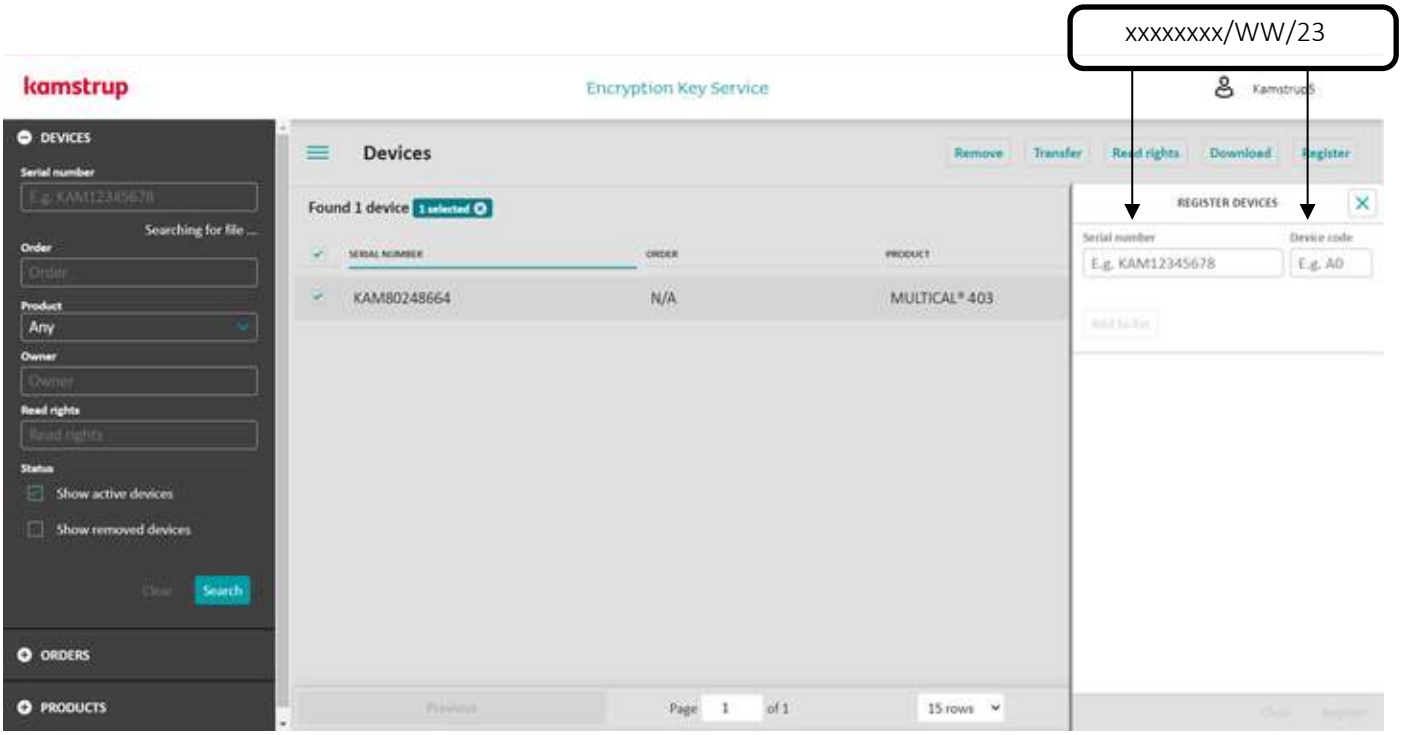

3.5 Target date

MULTICAL® 403 can be configured with up to two yearly target dates and two monthly target dates. These dates determine on which date data is to be logged (saved) in the calculator's interval logger. To avoid confusion about which time of the day the calculator saves data, MULTICAL® 403 also, in addition to the date, includes a time stamp for the logging. This time stamp is not included in this calculator's predecessor, MULTICAL® 402, which simply stamps data with a date. This difference also means that the date stamps of the two calculators vary in spite of the fact that both calculators are configured with a target date, e.g. 01.01 [MM.DD]. Note that although the date stamps of the two calculators are different, both calculators will in practice log (save) data at the same time. This is illustrated by the following example:

	MULTICAL® 402/602/801	*MULTICAL® 303/403/603/803*
Yearly target date [MM.DD]	01.01	01.01
Monthly target date [DD]	01	01
Date/time [20YY.MM.DD/ hh.mm.ss]	2018.12.31 / 24.00.XX [1]	2019.01.01 / 00.00.XX

[1] *Note that it is not possible to read out this time stamp from the calculator.*

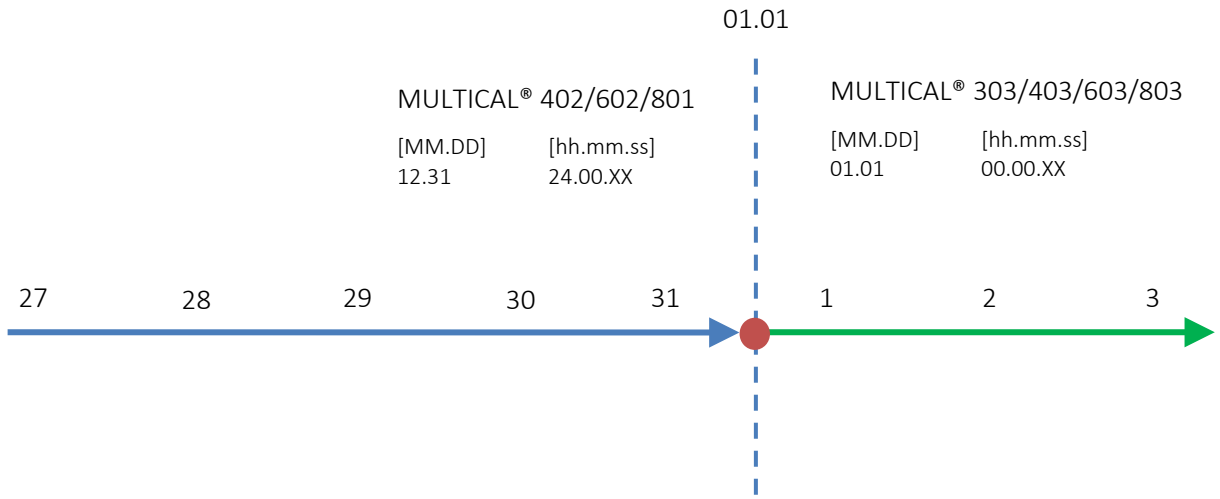

When using MULTICAL® 403 together with systems that are dependent on data being logged with a given target date, it is important to select this date as target date in the calculator's configuration. The target date can be configured both via the calculator's front keys in the "SETUP loop" and via METERTOOL HCW, see paragraph 6.3 and the technical description of METERTOOL HCW (5512-2097), respectively. If the target date is required to be set to the last day of the month, the monthly target date *[DD]* is set to 31. MULTICAL® 403 automatically logs on the last day of months with less than 31 days.

4 Installation

4.1 Installation requirements

Prior to installation of MULTICAL® 403 the heating system should be flushed while a fitting piece replaces the meter. Remove the adhesive wafers from the flow sensor's inlet and outlet and mount the flow sensor with couplings/flanges. New fibre gaskets in original quality must be used.

If other couplings than the original ones from Kamstrup A/S are used you must make sure that the threaded lengths of the couplings do not prevent proper tightening of the sealing surface.

The meter is configured for mounting of flow sensor in inlet or outlet before commissioning, see paragraph 6.3 about "SETUP loop". The flow direction is indicated by an arrow on the flow sensor.

In order to avoid cavitation the back pressure at the flow sensor (the pressure at the flow sensor outlet) must be minimum 1 bar at q_p and minimum 2 bar at q_s, however 1,5 and 2,5 bar respectively for q_p 15 flow sensor. This applies to temperatures up to approx. 80 °C. See paragraph 4.5 regarding operating pressure.

When the installation has been completed, water flow can be turned on. The valve on the flow sensor's inlet side must be opened first.

The flow sensor must not be exposed to lower pressure than ambient pressure (i. e. a vacuum).

Permissible operating conditions

Ambient temperature:	5…55 °C (indoors). Max. 30 °C for optimum battery lifetime.
Medium temperature of heat meter:	2…130 °C with calculator mounted on a wall
	15…90 °C with calculator mounted on flow sensor
Medium temperature of cooling meter:	2…50 °C with calculator mounted on a wall
Medium temperature of heat/cooling meter:	2…130 °C with calculator mounted on a wall
System pressure:	1,0…25 bar for threaded meters
(See paragraph 4.4)	1,0…25 bar for flange meters, however ≥ 1,5 bar for q_p 15

Electric installation

MULTICAL® 403 is available with either 24 VAC, 230 VAC or 24 VAC/VDC supply modules. The supply modules are connected to mains using two-wire cable without protective earth.
Use a strong connection cable with an outer diameter of max. 5-8 mm and ensure correct cable stripping and cable relief in the meter. It must be ensured that the entire installation complies with current rules. Supply cable to the meter and/or safety transformer must never be protected by a larger fuse than allowed. In case of doubt, it is recommended to seek counselling from a certified electrician. See paragraph 10 for more information about supply possibilities.

Service

Neither welding nor freezing is allowed whilst the meter is mounted. Before starting such work, the meter must be dismounted. If the meter is mains supplied, the supply must be switched off.

In order to facilitate replacement of the meter, closing valves should be mounted on both sides of the meter.

Under normal operating conditions no pipe strainer is required in front of the meter.

4.2 Inlet prerequisites

Kamstrup's flow sensors require neither straight inlet nor straight outlet to meet the Measuring Instruments Directive (MID) 2014/32/EU, OIML R75:2002 and EN 1434:2015. A straight inlet section will only be necessary in case of heavy flow disturbances before the meter. It is recommended to follow the guidelines in *CEN CR 13582, Heat meter installation. Instructions in selection, installation and use of heat meters*.

Optimal position can be obtained, if you take the below installation recommendations into consideration.

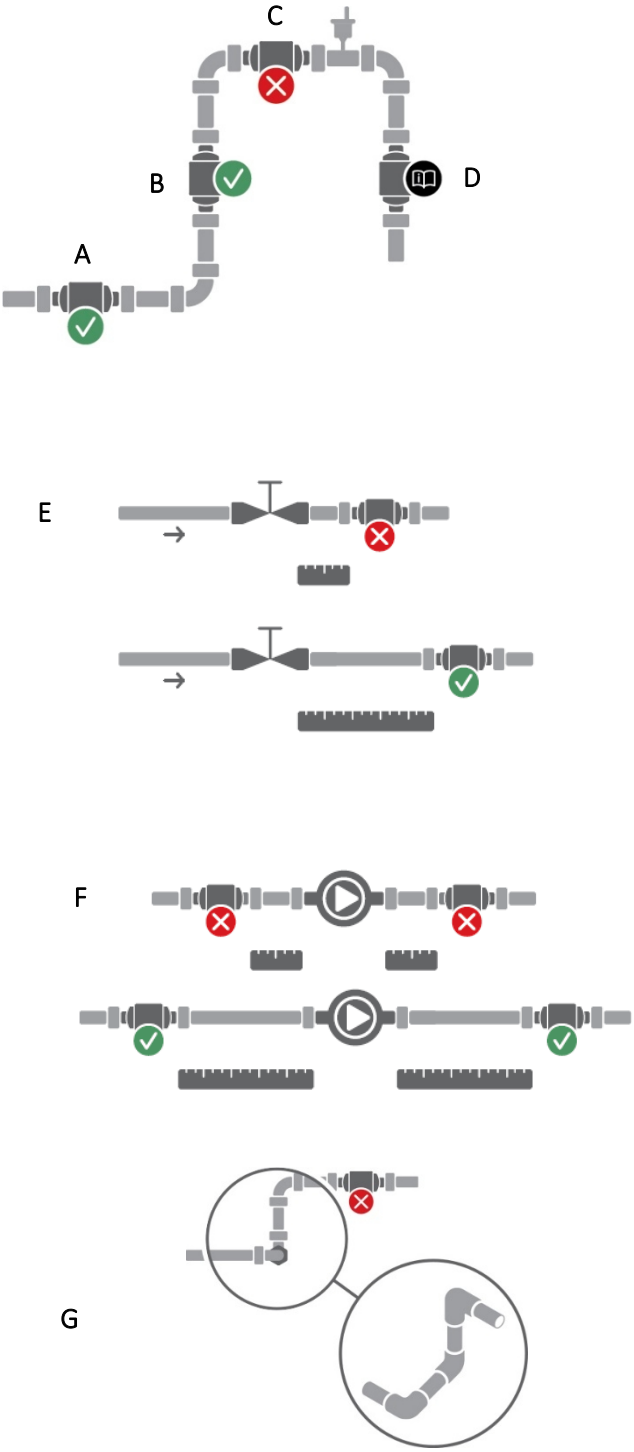

A Recommended flow sensor position.

B Recommended flow sensor position.

C Unacceptable position due to risk of air build-up.

D Acceptable position in closed systems.

Unacceptable position in open systems due to risk of air build-up in the system.

E A flow sensor ought not to be placed immediately after a valve, with the exception of shut-off valves (full bore ball valve type), which must be fully open when not used for shutting off.

F A flow sensor ought not to be placed immediately before (on the inlet side) or immediately after (on the pressure side) a pump.

G A flow sensor ought not to be placed immediately after a double bend in two planes.

Figure 2. General installation recommendations for flow sensors.

4.3 Orientation of Kamstrup's flow sensors

The recommended orientation of the flow sensor in an installation takes into account the metrological sensitivity of the flow sensor to orientation, for example because of orientation-dependent flow profiles; poor water quality of district heating water, e.g. dirt, which can accumulate in the flow sensor; air in the system and finally because of environmental requirements, for example in case of condensation. The recommendations may vary for each of the types because of their diversity in the design.

4.3.1 General recommendations

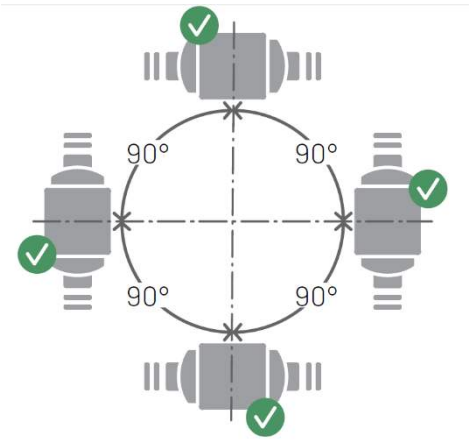

Kamstrup's flow sensors can be mounted vertically, horizontally or at an angle.

If Kamstrup flow sensors are vertically mounted, they can be turned ±360° around the pipe axis.

Important!

The plastic box should be placed on the side (at horizontal mounting). See below for additional details.

Figure 3. Separate mounting of Kamstrup flow sensors. Vertically, horizontally or at an angle.

At horizontal mounting, Kamstrup's flow sensors can be turned around the pipe axis. Acceptable angles of rotation for the various types of Kamstrup flow sensors can be seen *Figure 4* and *Figure 5*.

At medium temperatures above 90 °C and below ambient temperature, i.e. for cooling applications, calculator and Pulse Transmitter/Pulse Divider must not be mounted on the flow sensor. Instead wall-mounting is recommended. The orientation of the flow sensor in a cooling application does therefore not need to take the readability of the calculators display into account and can thereby be limited to the optimum orientation of the flow sensor only.

4.3.2 Recommendations for heat applications

Heat applications

Threaded meter housing with $q_p \leq 2{,}5\ m^3/h$	Threaded meter housing with $q_p \geq 3{,}5\ m^3/h$ and flange meters

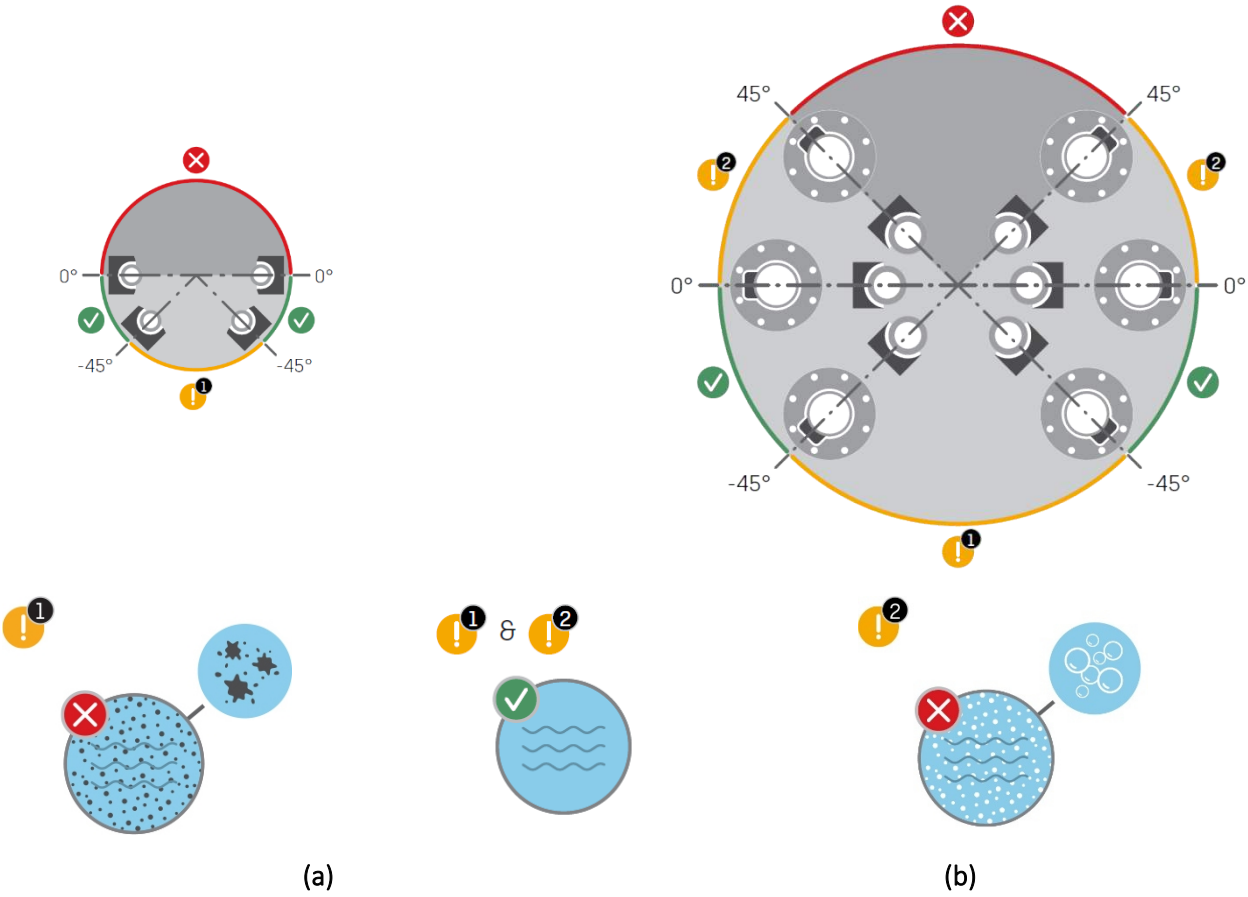

Figure 4. Acceptable orientation of Kamstrup flow sensors around the pipe axis for heating applications at horizontal mounting. ***(a)*** *Threaded meter housings with $q_p \leq 2{,}5\ m^3/h$.* ***(b)*** *Threaded meter housings with $q_p \geq 3{,}5\ m^3/h$ and flange meters.*

Note: The orientations marked with "!" are conditionally accepted, when the assumptions below are fulfilled.

(1) District heating/cooling water must be clean and must not contain any kind of dirt. Dirt can otherwise be deposited on the transducers of the flow sensor, which affects their ability to detect and transmit the ultrasound signal.

(2) District heating water must be free of air. Air bubbles will interfere severely with the ultrasound signal.

4.3.3 Recommendations for cooling and combined heat/cooling applications

Cooling and combined heat/cooling applications

Threaded meter housing with $q_p \leq 2{,}5\ m^3/h$	Threaded meter housing with $q_p \geq 3{,}5\ m^3/h$ and flange meters

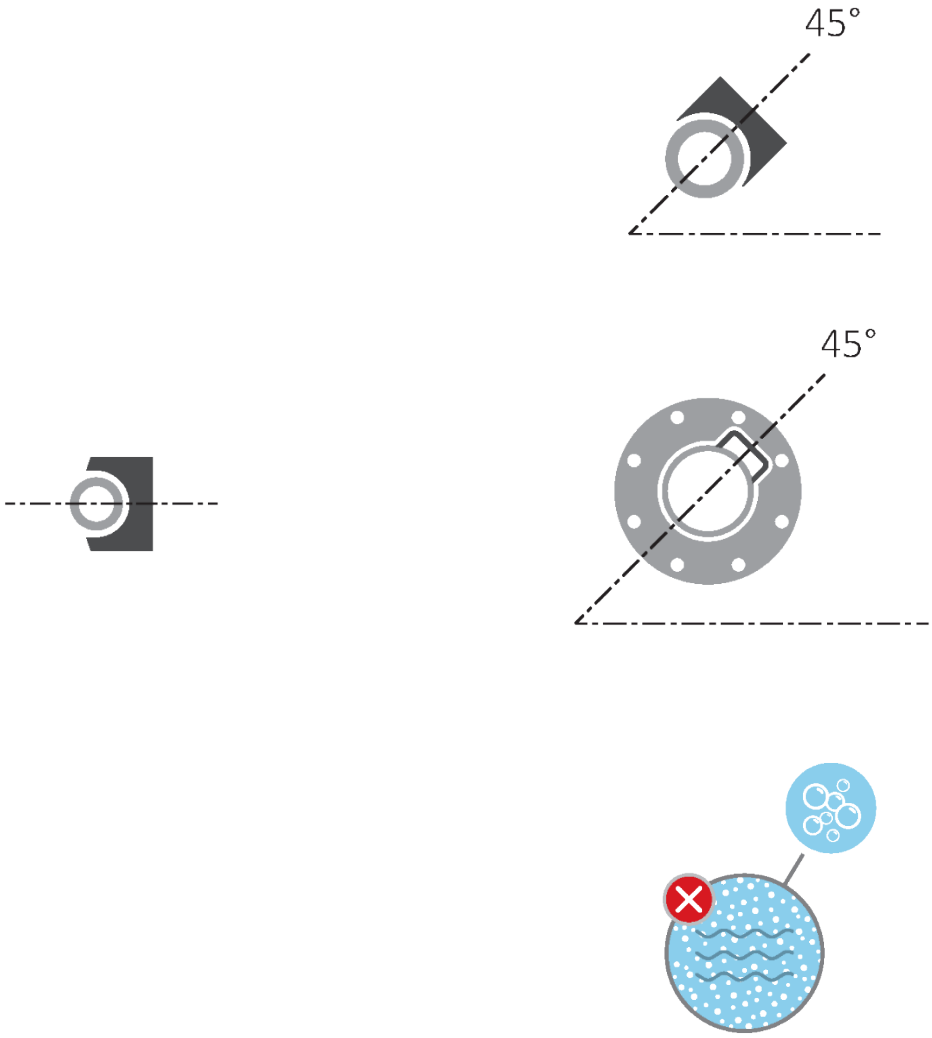

(a) (b)

Figure 5.

Recommended orientation of Kamstrup flow sensors around the pipe axis at horizontal mounting for cooling and combined heat/cooling applications.

***(a)** Threaded meter housings with $q_p \leq 2{,}5\ m^3/h$.*
***(b)** Threaded meter housings with $q_p \geq 3{,}5\ m^3/h$ and flange meters.*

Note: District heating and cooling water must be free of air. Air bubbles will interfere severely with the ultrasound signal. If there is risk of air, mount all flow sensors like in position (a) with the transducers to the side.

4.3.4 Recommendations for directly mounted temperature sensors

When mounting a temperature sensor directly in the outlet of the flow sensor, acceptable orientations for the temperature sensor must be taken into account. For heating applications (*Figure 6 (a)*), the orientation of a temperature sensor is not important as long as a homogeneous temperature distribution can be assumed, i.e. all orientations can be accepted. For cooling applications (*Figure 6 (b)*), water penetration into the sensor element must be avoided. Therefore, a temperature sensor is mounted ideally from the bottom pointing with its tip upwards and can be rotated up to a horizontal position.

(a) (b)

*Figure 6. Acceptable orientation of a temperature sensor in **(a)** a heating and **(b)** a cooling application.*

These recommendations for temperature sensor installation comply with the recommendations for flow sensor installation illustrated in *Figure 4* and *Figure 5*. However, while a temperature sensor can well be directly installed in a flow sensor for cooling application mounted in an ascending pipe, it must not be mounted in a flow sensor for cooling application mounted in a descending pipe.

The flow sensor can be used in both PN16 and PN25 installations and is delivered marked with PN16/PN25.

The blind plug delivered mounted in the MULTICAL® 403 flow sensor and the direct short sensor from Kamstrup A/S may be used in connection with both PN16 and PN25.

Any supplied extensions and couplings can be used for both PN16 and PN25.

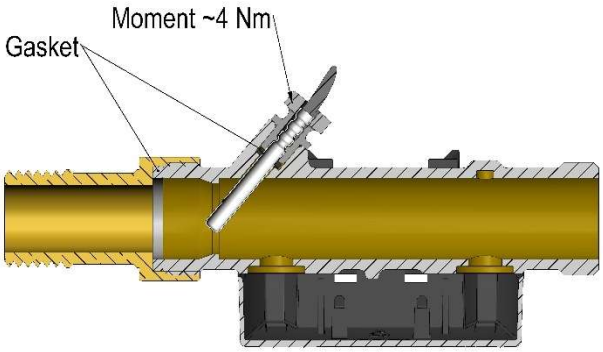

4.4 Mounting of MULTICAL® 403 calculator

4.4.1 Compact mounting

Compact mounting means that the calculator is mounted directly on the flow sensor. If there is risk of condensation (e.g. in cooling applications), the calculator ought to be wall mounted. Furthermore, MULTICAL® 403 in cooling applications must be the condensation-proof version, type 403-T/C.

The construction of MULTICAL® 403 can provide minimum installation depth, both at 45° and 90° mounting of the flow sensor. Due to the design the mounting radius remains 60 mm in critical places.

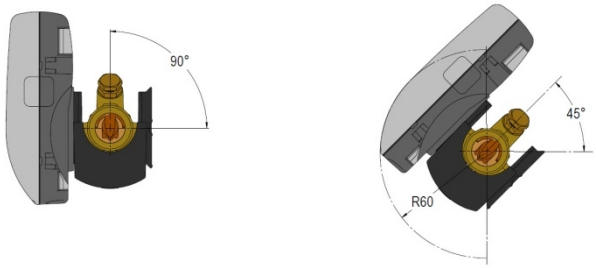

4.4.2 Wall mounting

The calculator can be mounted directly on an even wall. Wall mounting requires a wall fitting (3026-655), which is available as an accessory to MULTICAL® 403. MULTICAL® 403 is mounted on the wall fitting by sliding the calculator onto the fitting in the same way as it is done by compact mounting.

Note: Regarding qp 3,5 and bigger flow sensors the fitting on the flow sensor can be dismounted and used as a wall bracket.

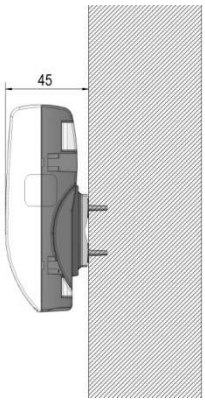

4.4.3 Position of calculator

If the flow sensor is installed in humid or condensing environment, the calculator must be wall mounted and positioned higher than the flow sensor.

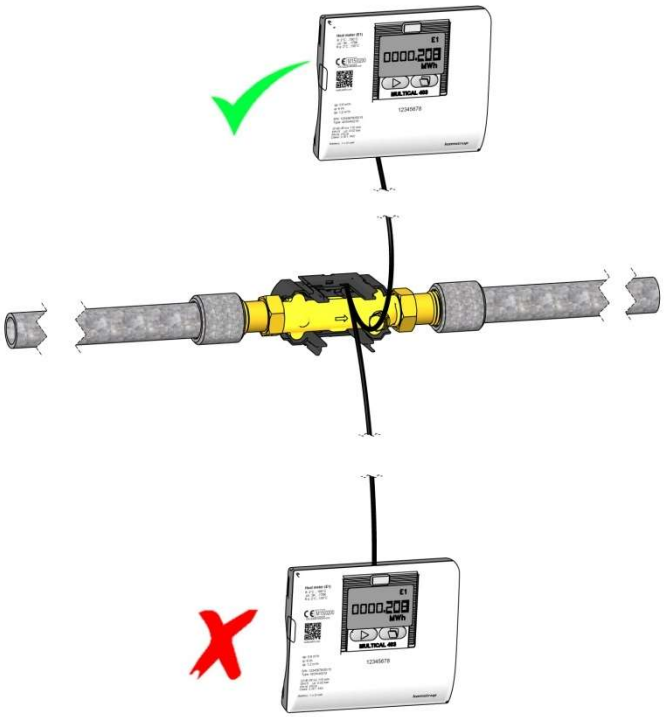

4.5 Operating pressure of MULTICAL® 403

In connection with installations it has proved practical to work with minimum the pressure mentioned in table 2 below:

Nominal flow q_p [m³/h]	Recommended back pressure [bar]	Max. flow q_s [m³/h]	Recommended back pressure [bar]
0,6…10	1	1,2...20	2
15	1,5	30	2,5

Table 2: Recommended back pressure at various flow sensor sizes
The values in the table apply to temperatures up to approx. 80 °C

The purpose of recommended back pressure is to avoid measuring errors as a result of cavitation or air in the water. Cavitation does not necessarily happen in the sensor itself, but can also occur as air bubbles created by pump cavitation and regulating valves mounted before the sensor. It can take considerable time until such bubbles have been dissolved in the water.

Furthermore, water can include dissolved air. The amount of air which can be dissolved in water depends on pressure and temperature. This means that air bubbles can be formed due to a pressure drop in the installation, e.g. caused by a velocity rise in a contraction or above the sensor.

The risk of influence from the above is reduced by maintaining a fair pressure in the installation.

In relation to table 2, the steam pressure at current temperature must be considered too. The values in the table apply to temperatures up to approx. 80 °C. The graph in *Diagram 2* applies to higher temperatures. Furthermore, it must be taken into consideration that the mentioned pressure is the back pressure at the flow sensor outlet and that the pressure is lower in a contraction than before one, e.g. in case of cones. This means that the pressure, if measured elsewhere in the installation, may differ from the pressure at the flow sensor.

The explanation of pressure drop due to velocity increase is found by combining the continuity equation and Bernoulli's equation. The total energy from the flow will be the same at any cross section.

It can be reduced to: $P + \frac{1}{2}\rho v^2 = \text{constant}$.

*where: P = pressure, ρ = density, **v** = velocity.*

Dimensioning a flow sensor you must take the above into account, especially if the sensor is used in the area between q_p and q_s described in EN 1434 , and in case of heavy contractions of the pipe.

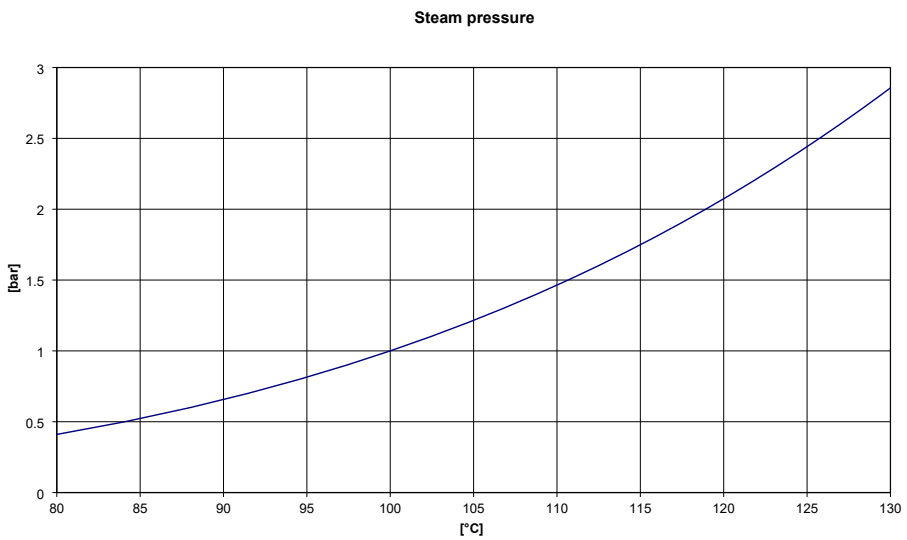

Diagram 2. Steam pressure as a function of temperature

4.6 Mounting in inlet or outlet

MULTICAL® 403 is configured for mounting of flow sensor in either inlet or outlet. In the display the flow sensor position is indicated by a symbol, subjacently the A-code of the program number is selected as 3 or 4 for flow sensor mounting in inlet and outlet respectively. The table below indicates installation conditions of heat meters and cooling meters:

Formula	k-factor	A-code and display	Hot pipe	Cold pipe	Installation
Heat meter E1=V1(t1-t2)k	k-factor for t1 and V1 in inlet	A-code = 3 Display 	V1 and t1	t2	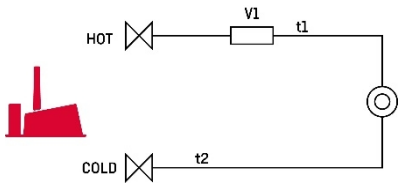
	k-factor for t2 and V1 in outlet	A-code = 4 Display 	t1	V1 and t2	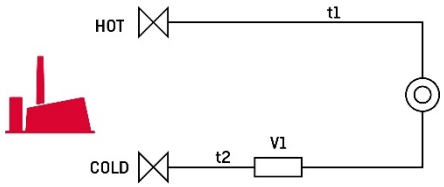
Cooling meter E3=V1(t2-t1)k	k-factor for t1 and V1 in inlet	A-code = 3 Display 	t2	V1 and t1	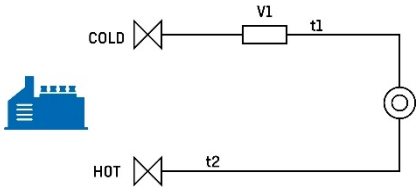
	k-factor for t2 and V1 in outlet	A-code = 4 Display 	V1 and t2	t1	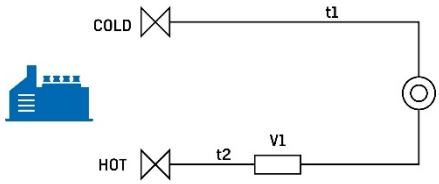

4.7 EMC conditions

MULTICAL® 403 has been designed and CE-marked according to EN 1434 Class A and C (corresponding to Electromagnetic environment: Class E1 and E2 of the Measuring Instruments Directive) and can thus be installed in both domestic and industrial environments.

All control cables must be drawn separately and not parallel to e.g. power cables or other cables with the risk of inducing electromagnetic interference. There must be a distance of min. 25 cm between signal cables and other installations.

4.8 Climatic conditions

MULTICAL® 403 is designed for indoor installation in non-condensing environments with ambient temperatures from 5…55 °C, however max. 30 °C in order to obtain optimal battery lifetime. Protection class IP54 of calculator allows splashes of water, but the calculator must not be submerged. The protection class of the flow sensor is IP68, which means that it stands submergence.

4.9 Sealing

According to EN 1434 MULTICAL® 403 must have protection devices, which can be sealed to the effect that after sealing, both before and after the heat meter has been correctly installed, it is impossible to dismount, remove or change the heat meter or its adjustment devices without visibly damaging meter or sealing. Correct sealing of MULTICAL® 403 includes two levels, installation sealing and verification sealing; a breaking of the sealing has different consequences on each level.

Installation sealing

Having completed the installation of MULTICAL® 403 installation sealing is the last thing to be done. The installation seal is the 'outermost' sealing level to be completed by the installer/utility. The Installation sealing must make sure that calculator top and base cannot be separated and that temperature sensors cannot be dismounted without visible signs that a separation has taken place. In practice the installation sealing can be done by means of wire and seal, sealing label or a combination of the two. The sealing is the utility's security that unauthorized persons cannot, undiscovered, change the installation around the meter. Breaking the installation sealing alone does not influence the meter's possibility of renewed installation sealing, or the fact that it is legal in relation to its approval and verification.

Installation sealing and "SETUP loop"

In order to bring MULTICAL® 403 back to "SETUP loop" after installation, calculator top and base must be separated, after which "SETUP loop" can be accessed either via front keys or via METERTOOL HCW. Separation of calculator top and base implies that the calculator's installation seal is broken.

Verification seal

The verification sealing of MULTICAL® 403 consists of both mechanical and electronical sealing. The verification seals marked "LOCK" and "TEST" are placed on the grey verification cover in the calculator top. These seals can be seen as the 'innermost' sealing level, which may only be broken by authorized laboratories in connection with test and reverification of the meter. If the meter is to be used for legal operation in relation to approval and verification after breaking of the verification sealing, the broken seals must be resealed. The sealing must be carried out by an authorized laboratory using the sealing mark (void label) of the laboratory.

4.10 Pressure loss

Pressure loss in a flow sensor is stated as max. pressure loss at q_p. According to EN 1434 maximum pressure must not exceed 0.25 bar.

The pressure loss in a sensor increases with the square of the flow and can be stated as:

$$Q = kv \times \sqrt{\Delta p}$$

where:

Q = volume flow rate [m³/h]

kv = volume flow rate at 1 bar pressure loss [m³/h]

Δp = pressure loss [bar]

Graph	qp [m³/h]	Nom. diameter [mm]	Δp@qp [bar]	kv	q@0,25 bar [m³/h]
A	0,6	DN15/DN20	0,03	3,46	1,7
B	1,5	DN15/DN20	0,09	4,89	2,4
C	2,5	DN20	0,09	8,15	4,1
D	3,5	DN25	0,07	13,42	6,8
E	6	DN25	0,06	24,5	12,3
F	10	DN40	0,06	40,83	20,4
F	15	DN50	0,14	40,09	20,1

Table 3: Pressure loss table

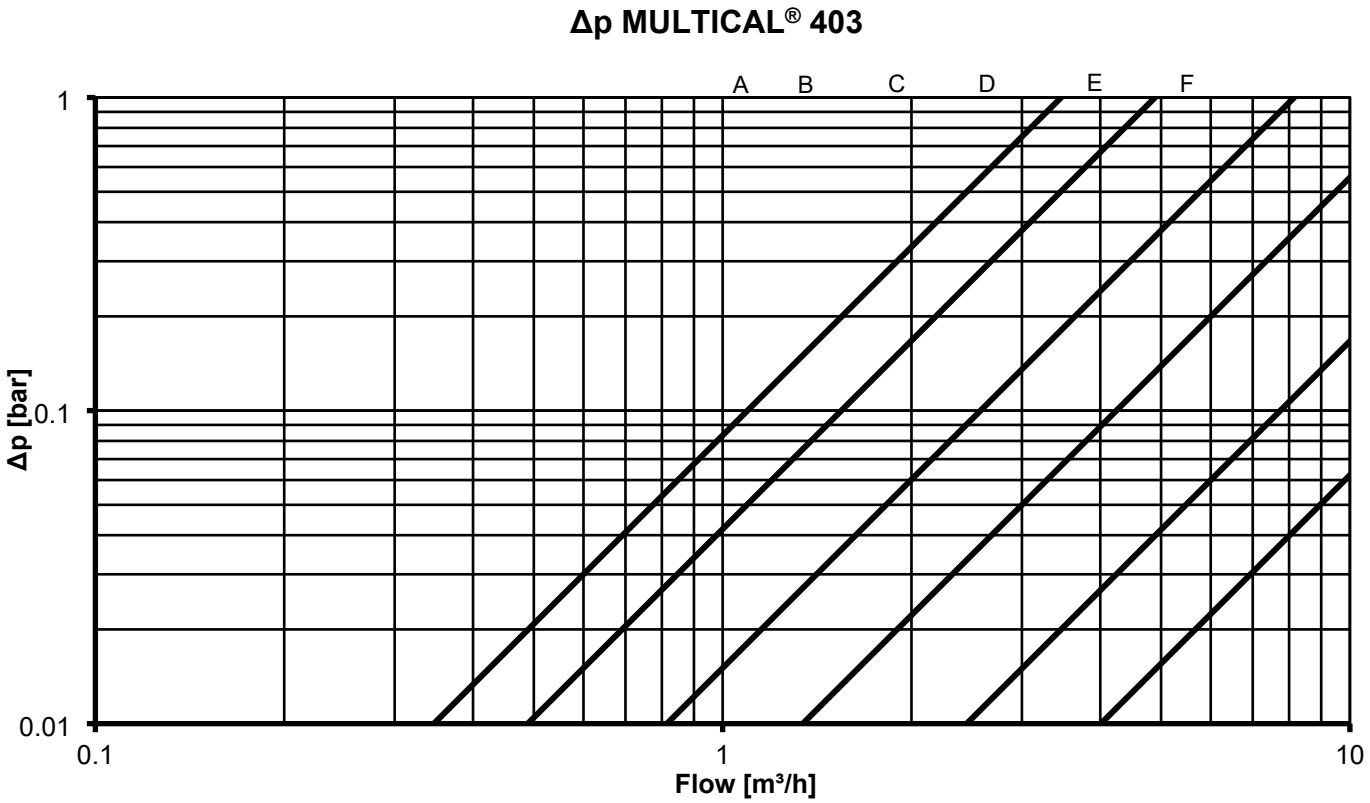

Diagram 3: Pressure loss graphs

5 Dimensioned sketches

Note: All measurements in [mm]

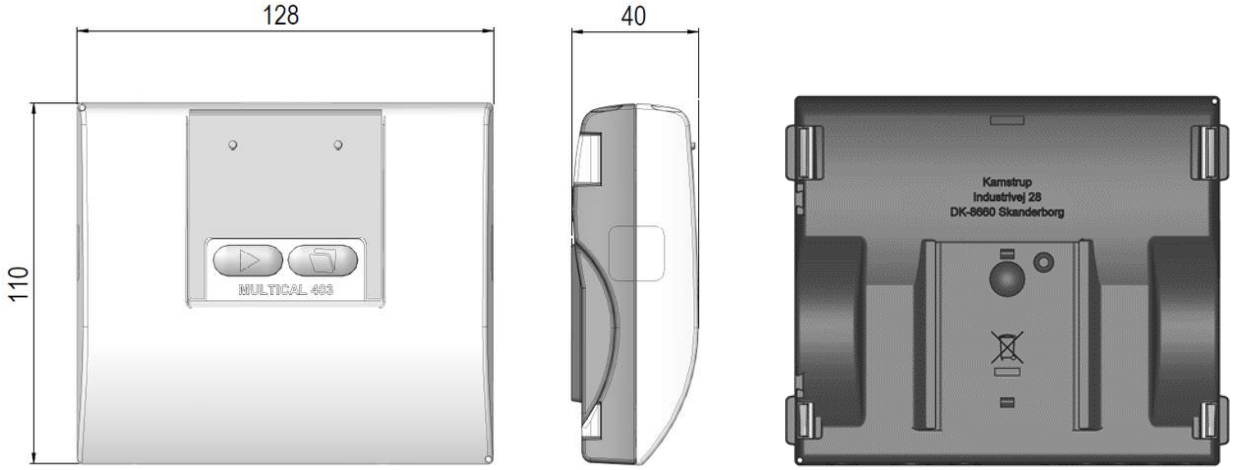

Figure 7: Mechanical measurements of calculator

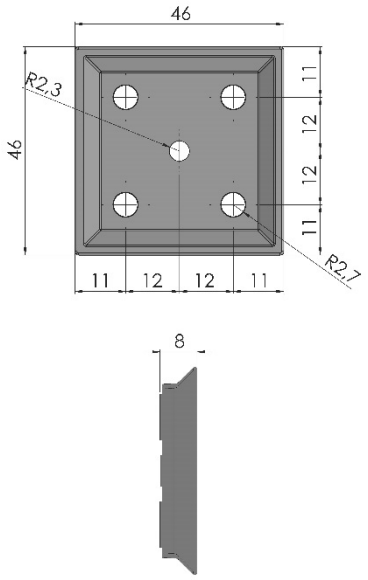

Figure 8: Wall bracket

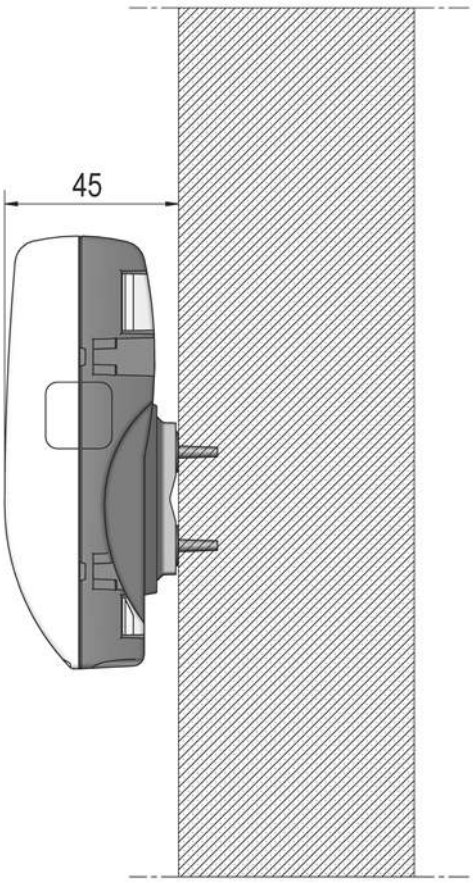

Figure 9: Mounted with wall bracket

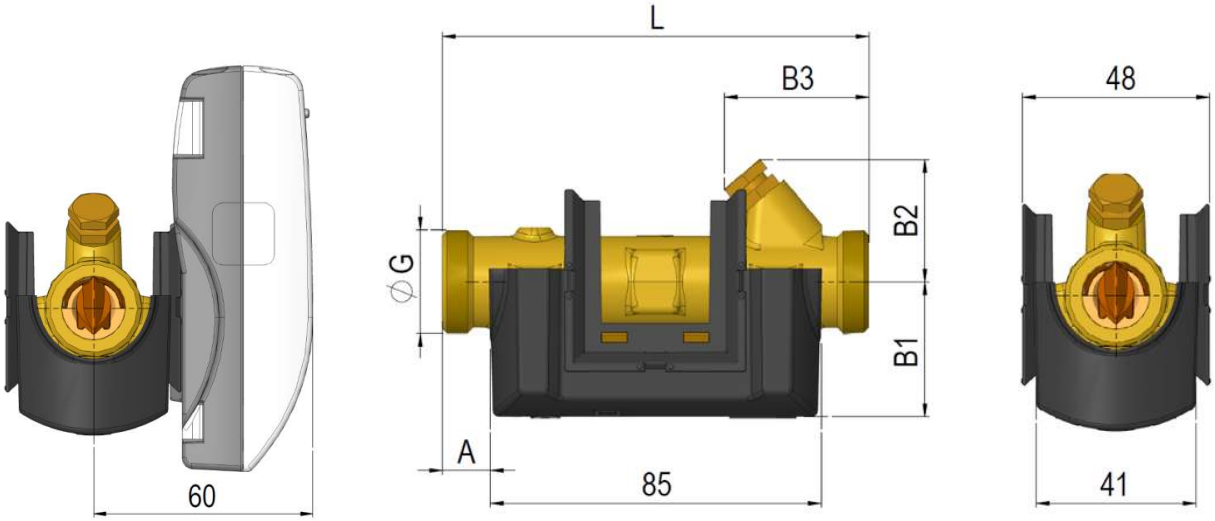

Figure 10: Flow sensor with G¾ and G1 thread connection

Thread EN ISO 228-1

Nominal flow q_p [m³/h]	Thread G	L	A	B1	B2	B3	Approx. weight [kg] [1]
0,6 + 1,5	G¾	110	12	35	32	38	0,9
1,5	G¾	165	12	35	32	65	1,0
1,5	G1	130	22	38	32	48	1,0
2,5	G1	130	22	38	38	48	1,0
0,6 + 1,5	G1	190	22	38	38	78	1,1
2,5	G1	190	22	38	38	78	1,2

[1] Weight of calculator, flow sensor and 3 m sensor set excl. packing

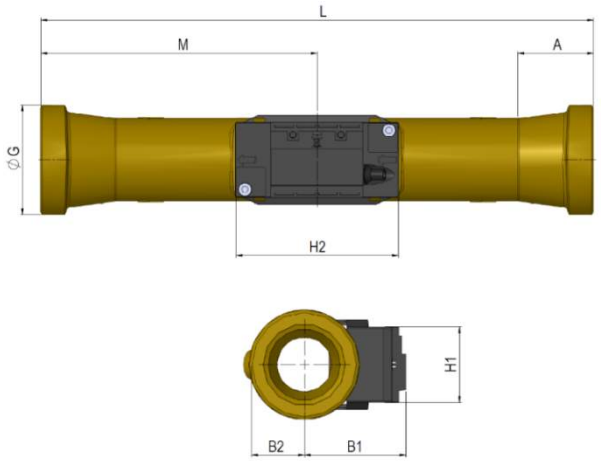

Figure 11: Flow sensor with G5/4 and G2 threaded connection

Thread EN ISO 228-1

Nominal flow q_p [m³/h]	Thread G	L	M	H2	A	B1	B2	H1	Approx. weight [kg] [1]
3,5	G5/4	260	130	88	16	51	20	41	2,0
6	G5/4	260	130	88	16	53	20	41	2,1
10	G2	300	150	88	40,2	55	29	41	3,0

[1] Weight of calculator, flow sensor and 3 m sensor set excl. packing

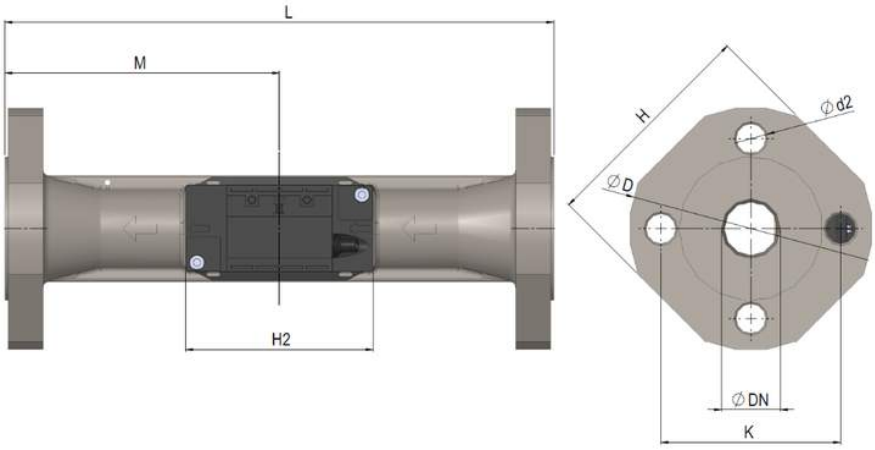

Figure 12: Flow sensor with DN25, DN40 and DN50 flange connection

Flange facing type B, raised face in accordance with EN 1092-1, PN25

Nominal flow q_p [m³/h]	Nom. diameter DN	L	M	H2	D	H	K	Bolts			Approx. weight [kg] [1]
								Number	Thread	d2	
6	DN25	260	130	88	115	106	85	4	M12	14	4,6
10	DN40	300	150	88	150	140	110	4	M16	18	7,5
15	DN50	270	155	88	165	145	125	4	M16	18	8,6

[1] Weight of calculator, flow sensor and 3 m sensor set excl. packing

6 Display

MULTICAL® 403 has a bright and clear display including 7 or 8 digits depending on configuration as well as a number of symbols for measuring units, info, inlet and outlet, radio on/off etc. The display is switched on by pressing either the primary or the secondary key on the meter's front. Depending on the selected integration mode (L-code) the display either switches off 8 min. after the latest activation of a key or remains switched on. Thus the selected integration mode influences the meter's battery lifetime. Read more about battery lifetime in paragraph 10.4 and more about the meter's integration modes in paragraph 3.2.7.

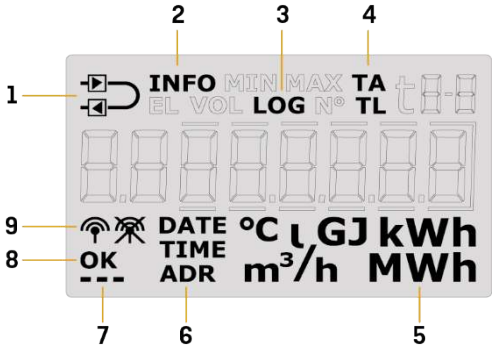

1	The meter is configured as inlet or outlet meter
2	Flashes at active info code
3	Historical readings
4	Tariff registers/tariff limits
5	Measuring unit

6	Date, time and address
7	Heart beat indication shows that both meter and display are active
8	"OK" is displayed when a changed value has been saved
9	The meter's radio communication is switched on or off

The meter uses four different display loops. The four loops are intended for four different usage situations.

- "USER loop"
  The meter's configurable display loop, which is intended for the user. The readings in this loop can be adjusted to the requirements via the DDD-code. See paragraph 3.2.4 for an overview of possible readings in the meter's "USER loop". The same paragraph includes examples of DDD-codes.

- "TECH loop"
  This loop is intended for technicians and is not configurable. The loop displays all the meter's readings. The loop includes readings like serial number, date, time, config number, software revision and segment test. See paragraph 6.2 for a complete overview of the readings.

- "SETUP loop"
  "SETUP loop" is also intended for the technician. In this loop the technician can configure the meter via the front keys. In general (unless otherwise requested by the customer) the loop is open in transport state. When the first integration has been carried out by the meter, the access to "SETUP loop" is blocked. From now on it is no longer possible to access "SETUP loop" unless you break the installation seal. See paragraph 6.3 for further details about the various parameters which can be configured in "SETUP loop" and see paragraph 7.8 for details on the meter's transport state.

- "TEST loop"
  Used by authorized laboratories for reverification of the meter. This loop is not available unless the meter's test seal (verification seal) is broken.

By means of the meter's primary key you can choose from and switch between the four display loops. When delivered the meter is in transport state, which means that USER, TECH and "SETUP loop"s are available. Depending on country code, the access to "SETUP loop" can be blocked in transport state and is thereby not available on delivery. "TEST loop" can only be accessed if the test seal (verification seal) is broken.

Keeping the primary key activated for 5, 7 and 9 seconds respectively you can change between the meter's display loops. "TECH loop", "SETUP loop" and "TEST loop" use index numbers as the readings in these display loops are allocated to a specific index number. The index numbers facilitate navigation to the required reading. Index numbers are not used in the configurable "USER loop". The below figure illustrates, how it is possible to navigate in the meter's display by means of the primary key.

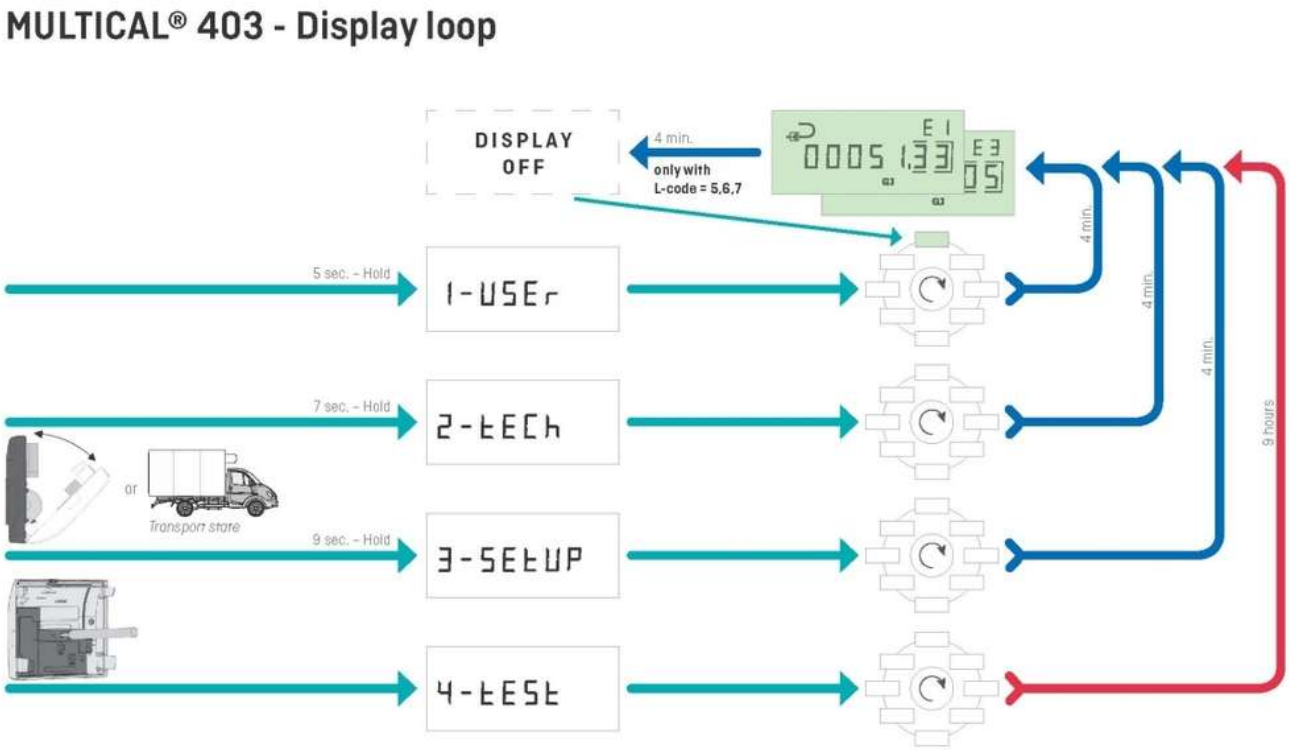

In order to facilitate the diagnostics work, lines are shown in the display readings (current values) which are influenced by any errors, and at the same time counting stops in the registers, which are influenced by the error. In case of interrupted or short-circuited temperature sensor the corresponding display reading will include lines. No lines are shown for flow measurement in case of flow sensor error "wrong flow direction" as this error does not prevent the meter from measuring. If the flow sensor is prevented from measuring, e.g. due to air in the flow sensor, the reading includes lines. The meter registers these errors and sets an info code, which can easily be read from the meter's display. Read more about the meter's info codes in paragraph 7.7.

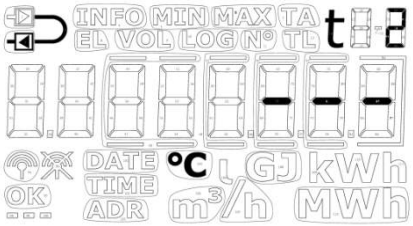

Temperature sensor t2 error

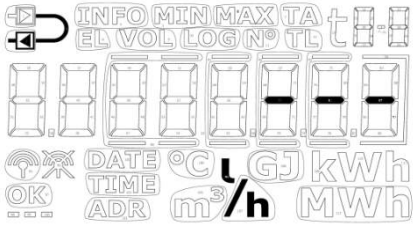

Flow sensor error

	t1 error	t2 error	Flow error
t1 inlet	Display - - -		
t2 outlet		Display - - -	
Δt (t1-t2)	Display - - -	Display - - -	
Flow, V1			Display - - -
Power, V1	Display - - -	Display - - -	Display - - -
E1	No counting	No counting	No counting
E3	No counting	No counting	No counting
E8	No counting		No counting
E9		No counting	No counting
V1			No counting
A1	No counting	No counting	No counting
A2	No counting	No counting	No counting
TA2	No counting	No counting	No counting
TA3	No counting	No counting	No counting
TA4	No counting	No counting	No counting

Heart beat and status indication

MULTICAL® 403 uses the three small display segments in the lower left corner of the display to indicate various status scenarios. Each segment will, depending on whether it is static or flashes, provide information about the given functionality in the meter. This is shown in the figure below:

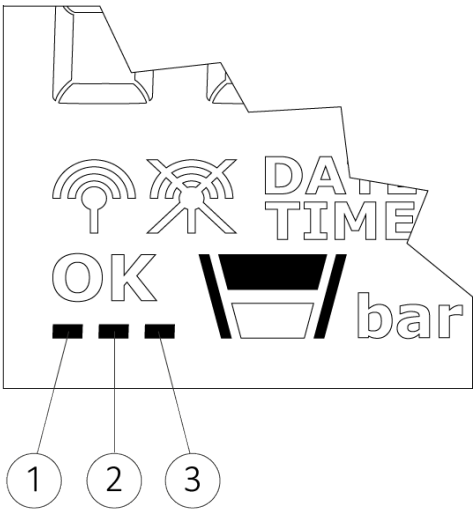

① Heart beat segment	**Flashes** - This segment always flashes as an indication that both the meter and display are active.
② SETUP and config segment	**Constantly lit** - The meter's config log is full, and it is therefore no longer possible to change the configuration. **Flashes** - It is possible to access the "SETUP loop". The segment flashes as long as the meter is in transport state or 4 minutes after the calculator top and base have been separated. **Turned off** - It is not possible to access the "SETUP loop" or to configure the meter via METERTOOL HCW.
③ Optical interface segment[1]	**Constantly lit** - The meter's optical interface is deactivated, and optical communication is thus not possible. **Flashes** - The optical interface is temporarily active, flashes for 4 minutes after the calculator top and base have been separated. In this period of time, it is possible to activate the optical interface permanently. **Turned off** - The optical interface is active, and it is possible to communicate with the meter.

[1] The optical interface can be deactivated and activated via the optical readout head and METERTOOL HCW. See Technical Description for METERTOOL HCW (5512-2097).

Positive/negative signs in heat/cooling applications

The accumulated energy registers, E1 and E3, are both always displayed as positive values. Differential temperature and power are either displayed as positive (heat) or negative (cooling) when reading the values on MULTICAL® 302, 303, 403, 603 and 803.

6.1 ”USER loop”

”USER loop” is the meter’s primary loop, which includes legal and mostly used readings. The loop is intended for the user and is configured according to the user’s requirements via the DDD-code. See paragraph 3.2.4 for further information on ”USER loop” and DDD-codes.

Note: No display index numbers are used in ”USER loop”.

6.2 ”TECH loop”

”TECH loop” is intended for the technician, who is interested in viewing more readings than the ones available in ”USER loop”.

”TECH loop” is not configurable and includes all the meter’s readings as well as module readings. ”TECH loop” comprises a number of fixed module readings as well as a number of module readings, which depend on the installed module.

Note: Module readings can be empty due to delay or interrupted communication between meter and module. Heart beat indication shows that both meter and display are active

The meter’s ”TECH loop” is shown below. A brief activation of the primary key makes the display reading shift to the next primary reading, whereas a brief activation of the secondary key results in a change to secondary reading.

Primary key		Secondary key		Index number in display	Logger depth in display	Reference numbers
1	Heat energy (E1)			2-001-00		
		1.1	*Date of yearly logger*	2-001-01	Log 01-02	
		1.2	*Data of yearly logger [1]*	2-001-02		
		1.3	*Date of monthly logger*	2-001-03	Log 01-12	
		1.4	*Data of monthly logger [1]*	2-001-04		
2	Cooling energy (E3)			2-002-00		
		2.1	*Date of yearly logger*	2-002-01	Log 01-02	
		2.2	*Data of yearly logger [1]*	2-002-02		
		2.3	*Date of monthly logger*	2-002-03	Log 01-12	
		2.4	*Data of monthly logger [1]*	2-002-04		

Primary key		Secondary key		Index number in display	Logger depth in display	Reference numbers
3	Volume (V1)			2-003-00		
		3.1	*Date of yearly logger*	2-003-01	Log 01-02	
		3.2	*Data of yearly logger [1]*	2-003-02		
		3.3	*Date of monthly logger*	2-003-03	Log 01-12	
		3.4	*Data of monthly logger [1]*	2-003-04		
4	Hour counter			2-004-00		
		4.1	*Error hour counter*	2-004-01		Nº 60
5	t1 (inlet)			2-005-00		
		5.1	*Year-to-date average [2]*	2-005-01		
		5.2	*Month-to-date average [2]*	2-005-02		
6	t2 (outlet)			2-006-00		
		6.1	*Year-to-date average [2]*	2-006-01		
		6.2	*Month-to-date average [2]*	2-006-02		
7	Δt (t1-t2) (Cooling shown by -)			2-007-00		
		7.1	*E8 (m^3·t1)*	2-007-01		
		7.2	*E9 (m^3·t2)*	2-007-02		
8	Flow, V1			2-008-00		
		8.1	*Date of max. this year [3]*	2-008-01		
		8.2	*Data of max. this year [1]*	2-008-02		
		8.3	*Date of max. this month [3]*	2-008-03		
		8.4	*Data of max. this month [1]*	2-008-04		
		8.5	*Date of min. this year [3]*	2-008-05		
		8.6	*Data of min. this year [1]*	2-008-06		
		8.7	*Date of min. this month [3]*	2-008-07		
		8.8	*Data of min. this month [1]*	2-008-08		

Primary key		Secondary key		Index number in display	Logger depth in display	Reference numbers
9	Thermal output, V1 (Cooling shown by -)			2-009-00		
		9.1	*Date of max. this year [3]*	2-009-01		
		9.2	*Data of max. this year [1]*	2-009-02		
		9.3	*Date of max. this month [3]*	2-009-03		
		9.4	*Data of max. this month [1]*	2-009-04		
		9.5	*Date of min. this year [3]*	2-009-05		
		9.6	*Data of min. this year [1]*	2-009-06		
		9.7	*Date of min. this month [3]*	2-009-07		
		9.8	*Data of min. this month [1]*	2-009-08		
10	Input A [4]			2-010-00		
		10.1	*Meter no. of Input A*	2-010-01		
		10.2	*L/imp. of input A*	2-010-02		Nº 65
		10.3	*Date of yearly logger*	2-010-03	Log 01-02	
		10.4	*Data of yearly logger [1]*	2-010-04		
		10.5	*Date of monthly logger*	2-010-05	Log 01-12	
		10.6	*Data of monthly logger [1]*	2-010-06		
11	Input B [4]			2-011-00		
		11.1	*Meter no. of Input B*	2-011-01		
		11.2	*L/imp. or Wh/imp. of input B*	2-011-02		Nº 67
		11.3	*Date of yearly logger*	2-011-03	Log 01-02	
		11.4	*Data of yearly logger [1]*	2-011-04		
		11.5	*Date of monthly logger*	2-011-05	Log 01-12	
		11.6	*Data of monthly logger [1]*	2-011-06		
12	TA2			2-012-00		
		12.1	*TL2*	2-012-01		
13	TA3			2-013-00		
		13.1	*TL3*	2-013-01		
14	TA4			2-014-00		
		14.1	*TL4*	2-014-01		
15	A1 (A-, Heat discount)			2-015-00		
		15.1	*A2 (A+, Heat addition)*	2-015-01		
		15.2	*t5 (Outlet temperature reference)*	2-015-02		

Primary key		Secondary key		Index number in display	Logger depth in display	Reference numbers
16	CP (moving average)			2-016-00		
		16.1	*Current power of input B* [5]	2-016-01		
		16.2	*Averaging period of CP*	2-016-02		
		16.3	*Date of yearly logger*	2-016-03	Log 01-02	
		16.4	*Data of yearly logger* [1]	2-016-04		
		16.5	*Date of monthly logger*	2-016-05	Log 01-12	
		16.6	*Data of monthly logger* [1]	2-016-06		
17	Info Code			2-017-00		
		17.1	*Info event counter*	2-017-01		
		17.2	*Date of info logger*	2-017-02	Log 01-50	
		17.3	*Data of info logger*	2-017-03		
18	Customer no.			2-018-00		Nº 1
		18.1	*Customer no.*	2-018-01		Nº 2
		18.2	*Date*	2-018-02		
		18.3	*Time*	2-018-03		
		18.4	*Yearly target date 1*	2-018-04		
		18.5	*Monthly target date 1*	2-018-05		
		18.6	*Yearly target date 2*	2-018-06		
		18.7	*Monthly target date 2*	2-018-07		
		18.8	*Serial number*	*2-018-08*		*No 3*
		18.9	*Type number (dynamic)*	*2-018-09*		*No 21*
		18.10	*Config 1 (ABCCCDDD)*	*2-018-10*		*No 5*
		18.11	*Config 2 (EEFFGGLN)*	*2-018-11*		*No 6*
		18.12	*Config 3 (PPRRT)*	*2-018-12*		*No 7*
		18.13	*Config 4 (VVVV)*	*2-018-13*		*No 8*
		18.14	*Software revision*	*2-018-14*		*No 10*
		18.15	*Software check sum*	*2-018-15*		*No 11*
		18.16	Averaging period of min./max. P and Q	2-018-16		
		18.17	θ_{hc}	2-018-17		
		18.18	Temperature sensor offset	2-018-18		
		18.19	*Temperature cutoff (ΔΘ)*	2-018-19 8		
		18.20	*Segment test*	2-018-20 9		

Primary key		Secondary key		Index number in display	Logger depth in display	Reference numbers
Module info 1:						
101	Type Config number [6] e.g. (20-10-100) as 2010100			2-101-00		Nº 31
		101.xx	Firmware no./rev. [7] e.g. 5098-1357 C1 as 13570301	2-101-xx		Nº 32
		101.xx	Module serial number [7] e.g. 12345678	2-101-xx		Nº 33
		101.xx	Primary M-Bus address [7] e.g. 217 as 217	2-101-xx		Nº 34
		101.xx	M-Bus secondary ID [7] e.g. 12345678 as 12345678	2-101-xx		Nº 35
		101.xx	M-Bus enhanced secondary ID [7] e.g. 12345678 as 12345678	2-101-xx		Nº 36

[1] *Depending on the selected depth of yearly and monthly logs in the programmable data logger these display readings can include empty readings.*

[2] *The average is volume based.*

[3] *Only the date of min/max is displayed in format 20xx.xx.xx.* By serial reading the time (hh.mm) is included too.

[4] *Inputs A and B are currently updated in the display of MULTICAL® 403, thus the display of the connected water or electricity meter* will be in accordance with the display of *MULTICAL® 403 without delay.*

[5] *The unit of this reading is fixed at kW.* The reading updates at the same *speed as the integration interval, which is determined by the L-code.*

[6] *These are fixed readings under module info.*

[7] *These readings depend on the module and are thus not fixed readings. The order of the readings can vary, therefore, the index number is set at "xx".*

[8] *Temperature cutoff has been introduced from software revision 14540201 (B1), this display will not be available in earlier versions.*

[9] *In software revisions prior to 14540201 (B1), the segment test is found on index number 2-25-25.*

6.2.1 Module readings

"TECH loop" includes a number of module readings which depend on the module. These readings are described in the respective technical descriptions for the modules. Simple modules, however, only include the primary reading "Type-Config number" (index number 2-101-00). If the meter is not fitted with a module "Type-Config number" is displayed as "0000000".

Note: The module readings can be empty due to delay or interrupted communication between meter and module. Heart beat indication shows that both meter and display are active

	Index number in display	Display reading	Display reference number
Type/Config No.	2-101-00		Nº 31
Firmware no./rev. Firmware 1357 C1	2-101-xx [1]	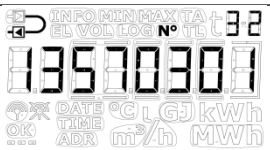	Nº 32
Module serial number No. 12345678	2-101-xx [1]		Nº 33
Primary M-Bus address	2-101-xx [1]	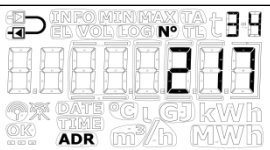	Nº 34
M-Bus secondary ID	2-101-xx [1]		Nº 35
M-Bus enhanced secondary ID	2-101-xx [1]		Nº 36

[1] *These readings depend on the module and are thus not fixed readings. The order of the readings can vary, therefore, the index number is set at "xx".*

6.3 ”SETUP loop”

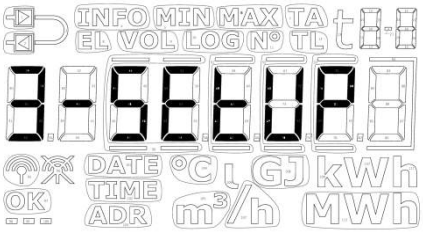

In this loop the technician can configure the meter via the front keys. This enables the technician to configure the meter both before installation and after commissioning of the meter. Configuration of the meter after commissioning requires that the installation seal is broken and that meter top is separated from meter base.

Please note that it is only possible to configure the meter 25 times via ”SETUP loop”. After 25 times the meter is locked against further configuration, and total reset and reverification of the meter is required to regain access to ”SETUP loop”.

How to enter ”SETUP loop”?

1. In general (unless otherwise requested by the customer) ”SETUP loop” is available when the meter is in transport state. The meter leaves transport state at the first integration or if ”SETUP loop” is ended by the menu point ”EndSetup”. A total reset of the meter is the only way to return to transport state.

2. When the meter is in operation, i.e. the meter has left transport state, the ”SETUP loop” can be accessed by breaking the meter’s installation seal, i.e. separating and reassembling meter top from meter base.

How to end ”SETUP loop”?

You can exit ”SETUP loop” in three ways. All three ways can be used both in transport state and after commissioning of the meter.

1. Keep the primary key activated and navigate to the meter’s other loops.

2. After 4 minutes the meter will time out and revert to the first reading in ”USER loop”.

3. Navigate to the menu point ”EndSetup” in ”SETUP loop” and keep the secondary key activated for 5 seconds.
   Note: This locks the access to ”SETUP loop”, and thereby the meter is locked against further configuration. Subsequent reconfiguration of the meter requires that you break the installation seal.

IMPORTANT: “EndSetup” is an important function when the meter is in transport state, but when the meter is in operation, ”EndSetup” is just one of three ways to exit ”SETUP loop”.

As it appears from the table overleaf the purpose of menu point ”EndSetup” is to enable the technician to lock the access to ”SETUP loop” in transport state and thus lock the meter against further configuration. This function is e.g. relevant to a technician who knows that a meter is to be mounted in the installation for some time before the first integration will be carried out and wants to lock the access to ”SETUP loop” immediately after the installation to make sure that no further configuration is possible.

It also appears from the table below that no matter how you exit ”SETUP loop” when the meter is in operation, the installation seal must be broken again and calculator top and base must be separated and reassembled if the technician wants to regain access to ”SETUP loop”.

	Transport state	In operation
1. Primary key	✓ Access to ”SETUP loop”	✗ Access to ”SETUP loop” locked
2. Time out	✓ Access to ”SETUP loop”	✗ Access to ”SETUP loop” locked
3. ”EndSetup”	✗ Access to ”SETUP loop” locked	✗ Access to ”SETUP loop” locked

6.3.1 Change of parameters in the ”SETUP loop”

The user can navigate to the ”SETUP loop” from the ”USER loop” by keeping the primary key activated for 9 seconds. When the primary key is released, the ”SETUP loop” can be accessed, and after this the primary key is used for navigating to the required parameter by activating the key at brief intervals. The ”SETUP loop” does not include secondary readings, and, therefore, the index number always consists of 4 digits, see table with SETUP parameters.

In the ”SETUP loop”, the secondary key is used for accessing individual readings with the purpose of changing the parameter in question. Pressing the secondary key, the first digit of the parameter in question (the digit farthest to the left) starts flashing. The flashing digit can now be changed through brief activations of the secondary key. A brief activation of the primary key moves focus to the next digit. Pressing the primary key when focus is on the last digit (the digit farthest to the right), the meter saves the change and “OK” appears in the display.

Note: A change of the B-CCC code is not saved until you leave ”SETUP loop”.

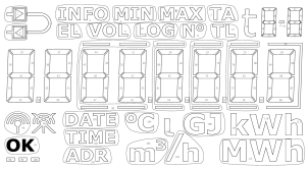

Depending on the meter’s configuration one or more menu points in ”SETUP loop” will be displayed as “Off”. This means that the function is not available in the meter, i.e. the function has been disabled during factory programming. If you try to access these readings via the secondary key, the frames around ”Off” are shown to indicate that the function is not available in the meter.

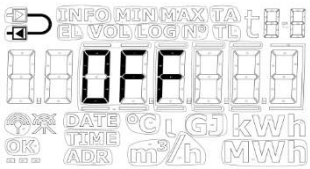

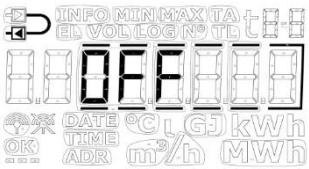

The table below shows the parameters which can be changed via ”SETUP loop” and on the following pages each parameter is explained in more detail.

Primary key		Index number in display
1	Customer number (Nº 1)	3-001
2	Customer number (Nº 2)	3-002
3	Date	3-003
4	Time [1]	3-004
5	Yearly target date 1 (MM.DD)	3-005
6	Monthly target date 1 (DD)	3-006
7	Flow sensor position: Inlet or outlet (A-code)	3-007
8	Measuring unit and resolution (B and CCC code) (B and CCC-codes are configured as e.g. ”0,001 MWh” and ”0,01 m^3”)	3-008
9	Primary address for module	3-009
10	Averaging period of min./max. P and Q	3-010
11	Heat/cooling shift (θ_{hc}) [2] (Only active if meter type 6 is selected)	3-011
12	Temperature sensor offset (t_{r0}) [3]	3-012
13	Radio (on/off)	3-013
14	Input A (preset of register)	3-014
15	Input B (preset of register)	3-015
16	Meter number of Input A	3-016
17	Meter number of Input B	3-017
18	TL2	3-018
19	TL3	3-019
20	TL4	3-020
21	Preset of t5	3-021
22	”EndSetup”	3-022

[1] *In addition to adjusting the clock via ”SETUP loop”, the clock and the date can be changed via METERTOOL HCW and via the modules too.*

[2] *θ_{hc} can only be changed in meters configured as meter type 6.* In this meter type users can both change θ_{hc} and disable the function. If users attempt to access this menu in meters configured as other meter types, the message ”Off” is displayed.

[3] *This function can have been disabled via the selected country code.*

1. + 2 Customer no.

The customer number is a 16-digit figure distributed on two 8 digit menu points. The complete customer number can be adjusted via the two menu points in ”SETUP loop”.

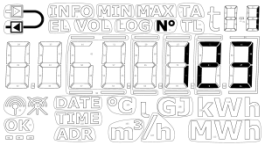

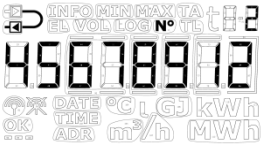

3. Date

The meter’s date can be adjusted in ”SETUP loop”. We recommend you to verify that the date was adjusted correctly, especially if time was adjusted too.

4. Time

The meter’s time can be adjusted in ”SETUP loop”. We recommend you to verify that the time was adjusted correctly, especially if the date was adjusted too.

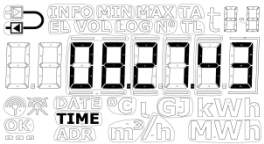

5. Yearly target date 1

The meter’s yearly target date 1 can be adjusted in ”SETUP loop”. In MULTICAL® 403 yearly target date 2 can be activated. This function is switched off by default, i.e. set at 00.00. If yearly target date 2 is active in a meter we recommend that both yearly target dates are adjusted via METERTOOL HCW to ensure that they are correctly set with respect to each other. Please note that activation of yearly target date 2 influences the depth of the yearly log as the meter now makes two yearly loggings.

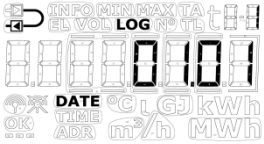

6. Monthly target date 1

The meter’s monthly target date 1 can be adjusted in ”SETUP loop”. In MULTICAL® 403 monthly target date 2 can be activated. This function is switched off by default, i.e. set at 00. If monthly target date 2 is active in a meter we recommend that both monthly target dates are adjusted via METERTOOL HCW to ensure that they are correctly set with respect to each other. Please note that activation of monthly target date 2 influences the depth of the monthly log as the meter now makes two monthly loggings.

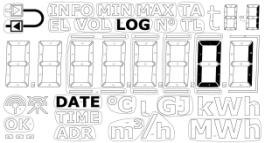

7. Flow sensor position: Inlet or outlet (A-code)

The installation position of the flow sensor can be adjusted in ”SETUP loop”. That is, the meter can be changed from being an outlet meter to being an inlet meter and visa versa. A symbol in the top left corner of the meter’s display shows whether the meter is configured as an inlet or an outlet meter.

8. Measuring unit and resolution (B and CCC code)

The meter’s measuring unit (B-code) and resolution (CCC-code) can be adjusted in ”SETUP loop”. It is thus possible to change the meter’s energy reading to be displayed in kWh, MWh or GJ, as well as change the resolutions of both energy reading and volume reading.

Note: A change of B-code and/or CCC-code code is not saved until you leave ”SETUP loop”.

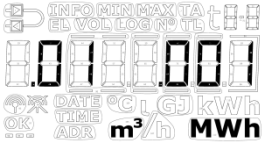

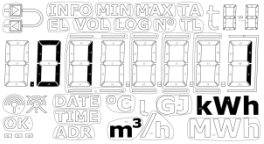

You can choose between an exactly defined number of combinations of B and CCC codes. These combinations are entered in a table and programmed into the meter during factory programming. The table is determined on the basis of selected flow sensor and nominal flow (q_p) . Below you see an example of this table at q_p = 1,5 m³/h.

q_p = 1,5 m³/h		Number of decimals in display						
B-code	CCC-code	GJ	kWh	MWh	m³	l/h	m³/h	kW
2	419	2	-	-	2	0	-	1
3	419	-	0	-	2	0	-	1
4	419	-	-	3	2	0	-	1
2	407	3	-	-	3	0	-	1
3	407	-	1	-	3	0	-	1
2	455	3	-	-	2	0	-	1
3	455	-	1	-	2	0	-	1

9. Primary address of module

The meter’s primary M-Bus address can be adjusted in ”SETUP loop”. The address can be selected in the interval 0…250.

10. Averaging period of min/max P and Q

The averaging period used in the calculation of minimum and maximum values of power (P) and flow (Q) can be adjusted. The averaging period is stated in minutes. Read more about the averaging period of min./max. of P and Q in paragraph 7.5.

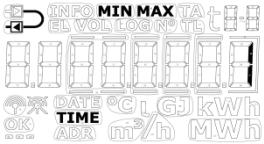

11. Heat/cooling shift (θ_{hc})

The limit (θ_{hc}) for heat/cooling shift can be adjusted in ”SETUP loop”, however only in meters ordered as meter type 6 (heat/cooling meter). The value can be set in the interval 2…180,00 °C as well as at 250,00 °C if the user wants to disable the function. The function can be enabled again by setting the limit at a value in the valid area of 2…180 °C. Heat/cooling shift is permanently disabled in other meter types, and ”Off” will thus be displayed for this reading in all other meter types than 6. Read more about heat/cooling shift in paragraph 7.4.

Meter type: 1, 2, 3, 4, 5, 7	Meter type: 6
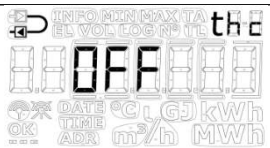	
The frames around ”Off” will be shown as long as the secondary key remains activated.	The first digit flashes and each digit can now be set at a value between 0 and 9. If you choose a value outside the valid interval (2…180,00 °C) the value is automatically adjusted to 250,00 °C, which indicates that the function has been switched off.

12. Temperature sensor offset (t_{r0})

Temperature sensor offset (t_{r0}) can be adjusted in ”SETUP loop”. Depending on the meter’s configuration this function can be disabled and the menu point will in that case display “Off”.

Offset can be adjusted in the interval -0,99…0,99 K. Pressing the secondary key the 0 and the sign start flashing and it is now possible to toggle between – and +, indicated in the display by the fact that the minus sign flashes and switches of respectively. Pressing the primary key the meter shifts focus to the first decimal, i.e. it is not possible to change the value of the first digit as the valid interval is -0,99…0,99 K. Both the first and the second decimal can be set to a value between 0 and 9. Read more about temperature sensor offset in paragraph 7.3.

Please be aware that the required offset adjustment must be entered, not the error of the temperature sensor set.
If the selected temperature sensor set contributes with an error of -0,20 K, the meter’s offset must be set at 0.20 K.

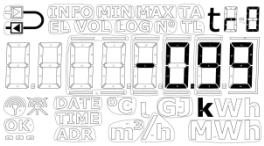

13. Radio on/off

The meter's radio/wireless communication can be adjusted to being switched on or switched off. The meter automatically switches on the radio when the meter leaves transport state because it has carried out its first integration. The radio on/off function in "SETUP loop" is primarily used for switching on the radio in transport state without the meter having made an integration as well as for switching off the radio when the meter is dismounted after having been in operation, e.g. because it is to be sent by airfreight. The meter's present condition is indicated by two symbols in the bottom left corner of the display.

IMPORTANT:

- If the meter's radio communication is switched off via "SETUP loop", the meter switches on radio communication again at the next integration (calculation of energy and volume).

- The symbols for radio on/off indicate whether the meter allows radio communication, not whether a radio module has activated its radio communication. Please be aware of this when troubleshooting the meter's wireless communication.

The above definition of the radio on/off symbols simplify the use of radio on/off in "SETUP loop" too as it is possible to toggle radio on/off whether a module is mounted in the meter or not. This fact offers the customer flexibility as the customer can configure the meter prior to mounting a module and thus, make sure that radio is either switched on or switched off by default when the module is subsequently mounted.

If there is either not installed a module in the meter or the mounted module is not a radio module, both symbols will be turned off in the meter's other loops, regardless of the setting of the radio (on/off) in the "SETUP loop". MULTICAL® 403 always allows radio communication during operation.

	Radio ON	Radio OFF	No module / not radio module
SETUP loop	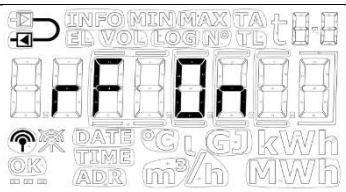	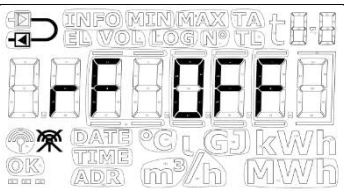	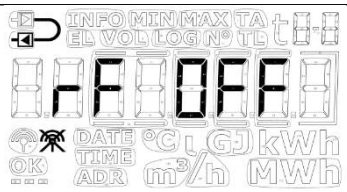
USER/"TECH loop"	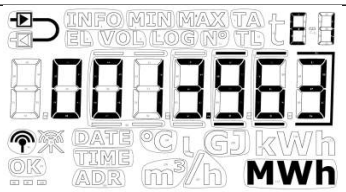	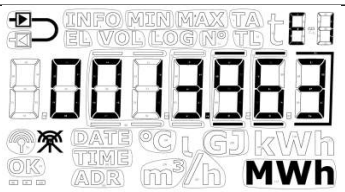	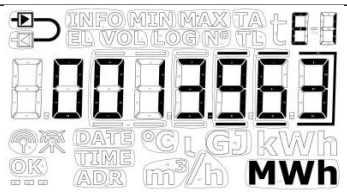

14. + 15 Inputs A and B (presetting of registers)

It is possible to preset the values of pulse inputs A and B in "SETUP loop", so that the meter's display is in accordance with the connected water and/or electricity meter(s). The example is based on the connection of a water meter.

16. + 17 Meter numbers of Inputs A and B

Meter numbers of the water and/or electricity meter(s) connected to pulse inputs A and B can be adjusted in ”SETUP loop”. The example is based on the connection of an electricity meter.

18. + 19 + 20 Tariff limits (TL2, TL3 and TL4)

The meter’s three tariff limits can be adjusted in ”SETUP loop”. The tariff limits are only active if a tariff type has been selected during configuration of the meter, i.e. the EE-code differs from ”00”. The EE-code is shown in ”TECH loop”, see paragraph 6.2. If a tariff type has been selected, the menu points reflect this by displaying the correct tariff limit units. If no tariff type has been selected the menu points will be without units. Read more about tariff types in paragraph 3.2.5.

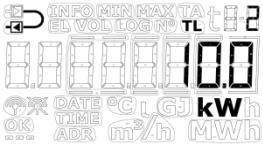

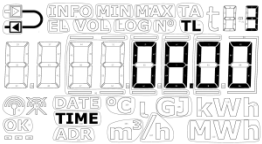

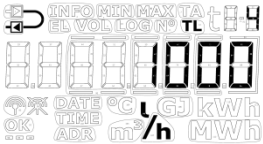

Note: It is not possible to have different types of tariff limits. The display readings shown are just examples.

21. Presetting t5

The value of temperature value t5 can be adjusted in ”SETUP loop”. This value is used in connection with the calculation of outlet energy registers, i.e. registers A1 (A-, heat at a discount) and A2 (A+, heat with an addition). Read more about this calculation and function in paragraph 7.1.3.

22. ”EndSetup”

The menu point ”EndSetup” enables the technician to lock the access to ”SETUP loop” in transport state and thus lock the meter against further configuration. In order to do so, the user must keep the secondary key activated for five seconds. During the five seconds the frames around the reading “EndSetup” will be shown in the meter’s display. This action can be undone by releasing the secondary key before the whole frame has become illuminated, i.e. before the five seconds have passed.

”EndSetup” is an important function when the meter is in transport state, but when the meter is in operation ”EndSetup” is just one of three ways, in which you can exit ”SETUP loop”. See paragraph 6.3 above.

6.4 ”TEST loop”

”TEST loop” is used by authorized laboratories for reverification of the meter among other things.

Before the meter can enter ”TEST loop” and thus TEST mode, the verification seal marked ”TEST” on the verification cover of meter must be carefully broken with a screwdriver and the contact points behind the seal be short-circuited with short-circuit pen type (6699-278).

We recommend that you complete your work in ”TEST loop” before starting reconfiguration via ”SETUP loop” or METERTOOL HCW as every reconfiguration is logged in MULTICAL® 403 (only 25 reconfigurations permitted).

The meter leaves TEST mode and returns to the first reading in ”USER loop” after 9 hours (time-out), or if the user keeps the primary key activated for 5 seconds.

Primary key	Secondary key	Index number in display

1.0	High-resolution heat energy [1]			4-001-00
		1.1	*Heat energy (E1)*	4-001-01
2.0	High-resolution cooling energy [1]			4-002-00
		2.1	*Cooling energy (E3)*	4-002-01
3.0	High-resolution volume [1]			4-003-00
		3.1	*Volume*	4-003-01
4.0	t1 (inlet)			4-004-00
5.0	t2 (outlet)			4-005-00
6.0	Flow			4-006-00

[1] *The resolutions of the high-resolution registers are 1Wh and 10 ml respectively for all flow sizes. The registers can only be reset by a total reset of the meter.*

7 Calculator functions

7.1 Application types and energy calculations

MULTICAL® 403 operates with 6 different energy formulas; E1, E3, E8, E9, A1 and A2, which are all calculated in parallel at every integration no matter how the meter is configured. E8 and E9 are used as a basis for the calculation of average temperatures of inlet and outlet, whereas E1 and E3 are used for heat and cooling measurement respectively. A1 and A2 are used as a basis for discount/addition, based on the outlet temperature (see paragraph 7.1.3).

7.1.1 Heat/cooling energy registers E1 and E3

Energy types E1 and E3 are described by application examples below.

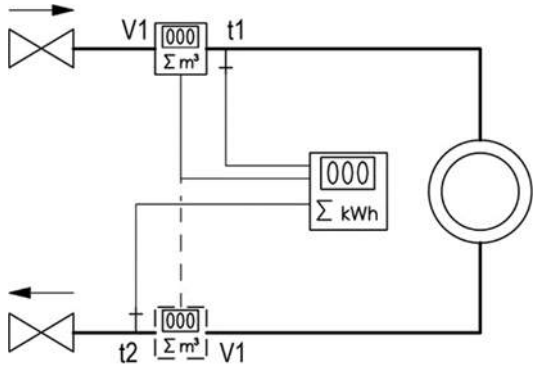 403-Wxx2	<u>Application A</u> **Closed heating system with one flow sensor** Heat energy: E1 = V1(t1-t2)k $_{t1:inlet\ or\ t2:outlet}$ Flow sensor V1 is mounted in inlet or outlet as selected during config. (Heat meter with MID marking and Pt500 sensor inputs)
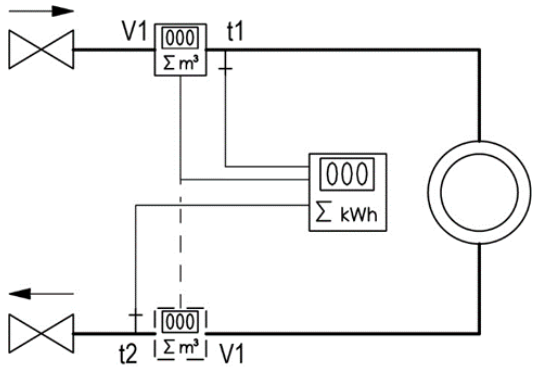 403-Txx5	<u>Application B</u> **Closed cooling system with one flow sensor** Cooling energy: E3 = V1 (t2-t1)k $_{t1:inlet\ or\ t2:outlet}$ Flow sensor V1 is mounted in inlet or outlet as selected during config. (Cooling meter with condensation protection and Pt500 sensor inputs)
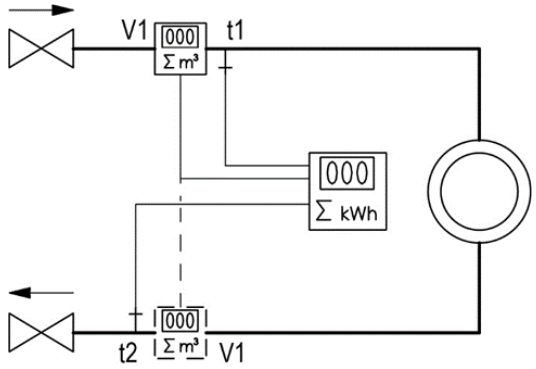 403-Txx6	<u>Application C</u> **Closed heat/cooling system with one flow sensor** Heat energy: E1 = V1(t1-t2)k $_{t1:inlet\ or\ t2:outlet}$ Cooling energy: E3 = V1 (t2-t1)k $_{t1:inlet\ or\ t2:outlet}$ Flow sensor V1 is mounted in inlet or outlet as selected during config. (Heat/cooling meter with condensation protection and Pt500 sensor inputs)

7.1.2 Energy registers E8 and E9

E8 and E9 are used as a basis for calculating the volume-based average temperatures of inlet and outlet respectively. With every volume count (every 0,01 m³ for qp 1,5 m³/h with CCC=419) the registers are accumulated by the product of m³ x °C, which makes E8 and E9 a suitable basis for calculation of volume-based average temperatures.

E8 and E9 can be used for average calculation during any period of time as long as the volume register is read at the same time as E8 and E9.

Resolution of E8 and E9

E8 and E9 depend on the resolution of the volume V1 (m³) which is fixed by the CCC code. This dependency means that a factor is used in connection with the calculation of E8 and E9. This also means that the same factor must be used in connection with the calculation of the average temperature.

Volume resolution	Resolution of E8 and E9
0000,001 m³	m³ x °C x 10
00000,01 m³	m³ x °C
000000,1 m³	m³ x °C x 0,1
0000001 m³	m³ x °C x 0,01

E8 and E9 can be used for calculating the average temperature in inlet and outlet in any periods of time if only:

1) The volume register is read at the same time as E8 and E9,
2) the relevant resolution factor is included in the calculation,
3) the requirement for a minimum flow (volume) is complied with.

E8 = m³ x t1, E8 is increased by the product of m³ x t1

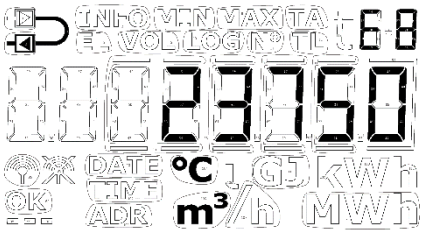

E9 = m³ x t2, E9 is increased by the product of m³ x t2

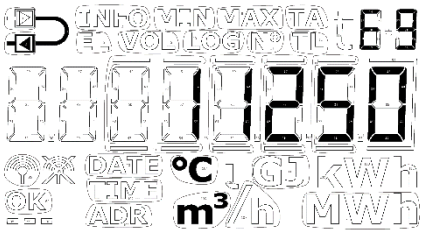

Example 1: E8 and E9 for a heating installation that within a year has used 250,00 m³ district heating water with average temperatures of 95 °C in inlet and 45 °C in outlet. The meter has a volume resolution of 00000,01 m³, and thus the formula m³ x °C is used with the following result: E8 = 23750 and E9 = 11250.

Example 2: The average temperatures are to be measured together with the yearly reading. Therefore, E8 and E9 are included in the yearly reading. The meter used in this calculation example is a qp 3,5 m³/h with CCC code 451 (volume resolution with 1 decimal/000000,1 m³).

Date of reading	Volume	E8	Temp. average for inlet	E9	Temp. average for outlet
2018.01.01	5342,6 m³	45346		18554	
2017.01.01	2368,7 m³	20123		7651	
Yearly consumption	2973,9 m³ (5342,6 – 2368,7 m³)	25223 (45346 - 20123)	25223 / 2973,9 / 0.1 **= 84,81 °C**	10903 (18554 – 7651)	10903 / 2973,9 / 0.1 **= 36,66 °C**

Table 4

7.1.3 Outlet energy registers A1 and A2

The function behind the ”Outlet energy registers” is the fact that A1 accumulates heat energy consumed with low outlet temperature, for which the customer receives a discount, and A2 accumulated heat energy consumed with high outlet temperature, for which the consumer receives an addition.

The energy calculations of a heat meter with flow sensor in outlet are shown below:

$A1 = m^3 \times (t5-t2)k_{t2}$ Heat energy at a discount

$A2 = m^3 \times (t2-t5)k_{t2}$ Heat energy with an addition

The energy is calculated only by positive temperature difference.

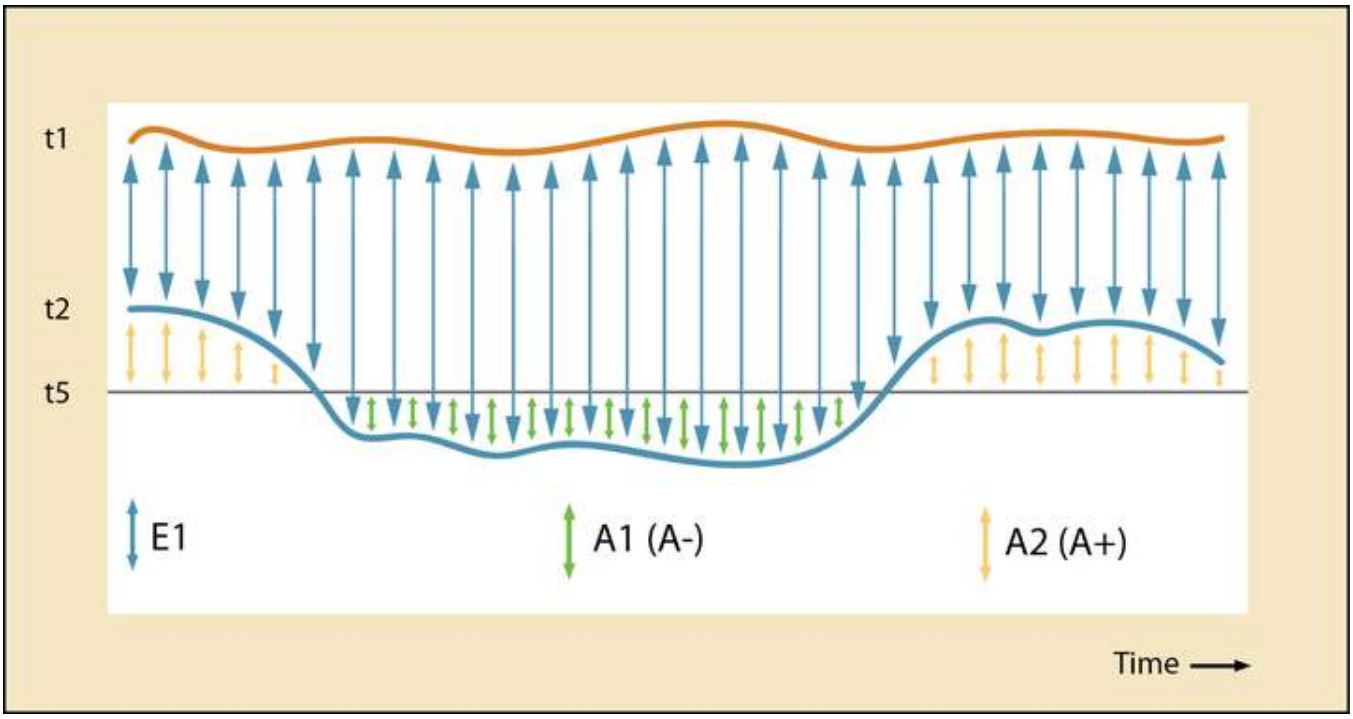

The outlet temperature reference t5 can be factory-configured as required, or can be changed via METERTOOL HCW after delivery. Typical configuration is t5 = 50 °C.

Symbol	Explanation	Measuring unit
t1	Inlet temperature	[°C]
t2	Outlet temperature	
t5	Outlet temperature reference	
E1	Total heat energy	[kWh], [MWh], [GJ]
A1	Heat energy at a discount	
A2	Heat energy with an addition	

As the accuracy of the absolute temperature has direct influence on the accuracy of outlet energy registers A1 and A2, the zero error of the sensor set and the influence from the sensors’ connection cable ought to be compensated via the offset adjustment of MULTICAL® 403 (see paragraph 7.3)

7.1.4 Energy calculations

MULTICAL® 403 calculates energy on the basis of the formula stated in EN 1434-1, which uses the international temperature scale issued in 1990 (ITS-90) and the pressure definition of 16 bar.

In a simplified form the energy calculation can be expressed as: Energy = V x ΔΘ x k. The calculator always calculates energy in [Wh], and then converts the value to the selected measuring unit.

E [Wh] =	V x ΔΘ x k x 1000
E [kWh] =	E [Wh] / 1,000
E [MWh] =	E [Wh] / 1,000,000
E [GJ] =	E [Wh] / 277,800

V is the added (or simulated) water volume in m^3

ΔΘ is the measured temp. difference: Heat energy (E1) ΔΘ = inlet temperature less outlet temperature
Cooling energy (E3) ΔΘ = outlet temperature less inlet temperature

Both in the display and during data reading each energy type is uniquely defined e.g.

Heat energy: E1 = V1(t1-t2)k

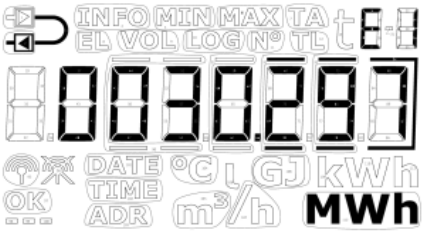

Cooling energy: E3 = V1(t2-t1)k

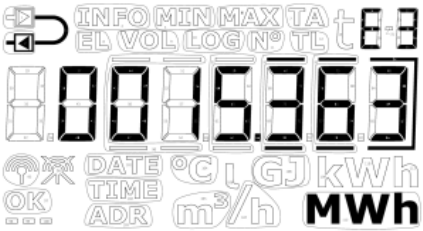

k is the heat coefficient of water, calculated according to the formula of EN 1434 and OIML R75-1:2002

Kamstrup A/S can supply an energy calculator for check measurement:

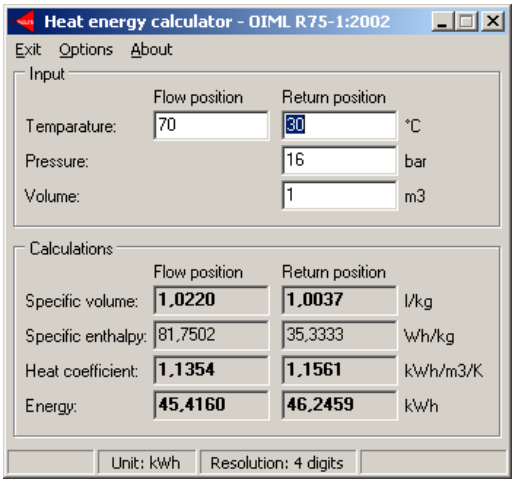

		Calculation	Condition
<u>Heat energy</u> (E1, A1, A2)	Inlet	E1 = m^3x(t1-t2)k_{t1} A1 = m^3x(t5-t2)k_{t1} A2 = m^3x(t2-t5)k_{t1}	t1 > t2 If t1 = t2 then E1, A1, A2 = 0 If t5-t2 ≤ 0 then A1 = 0 If t2-t5 ≤ 0 then A2 = 0 $\theta_{t1} > \theta_{hc}$ *(meter type 6)*
	Outlet	E1= m^3x(t1- t2)k_{t2} A1 = m^3x(t5-t2)k_{t2} A2 = m^3x(t2-t5)k_{t2}	t1 > t2 If t1 = t2 then E1, A1, A2 = 0 If t5-t2 ≤ 0 then A1 = 0 If t2-t5 ≤ 0 then A2 = 0 $\theta_{t1} > \theta_{hc}$ *(meter type 6)*
<u>Cooling energy</u> (E3)	Inlet	E3 = m^3x(t2- t1)k_{t1}	t1 < t2 $\theta_{t1} < \theta_{hc}$ *(meter type 6)*
	Outlet	E3 = m^3x(t2 – t1)k_{t2}	t1 < t2 $\theta_{t1} < \theta_{hc}$ *(meter type 6)*
<u>Inlet/outlet energy</u> (E8, E9)		E8 = m^3xt1 E9 = m^3xt2	

In case of failing temperature sensor or flow measurements the counting stops in the registers, which are influenced by the error. Furthermore, the displayed reading in question will include lines.

	t1 error	t2 error	Flow error
t1 inlet	Display - - -		
t2 outlet		Display - - -	
Δt (t1-t2)	Display - - -	Display - - -	
Flow, V1			Display - - -
Power, V1	Display - - -	Display - - -	Display - - -
E1	No counting	No counting	No counting
E3	No counting	No counting	No counting
E8	No counting		No counting
E9		No counting	No counting
V1			No counting
A1	No counting	No counting	No counting
A2	No counting	No counting	No counting

7.2 Measurement of the coefficient of performance (CP) of a heat pump

In houses with heat pumps with an output it is expedient to measure both the released thermal energy and the gained electrical energy, based on which the coefficient of performance (COP or CP) can be calculated. COP is the abbreviation of ”Coefficient Of Performance”.

The calculation is based on simple proportional numbers between calculated thermal energy (E1) and electrical energy, which is measured via pulse input B (Input B):

$$CP = \frac{Thermal\ energy\ [E1]}{Electrical\ energy\ [Input\ B]}$$

Electrical energy (Input B) is always registered in kWh, whereas thermal energy (E1) is either registered in kWh, MWh or in GJ depending on the selected B-code. No matter which unit you choose the meter calculates CP correctly. The CP value is displayed with one decimal and is a value in the interval 0,0…19,9.

The CP value can be displayed as a current value, a monthly value or a yearly value. In addition the averaging period of the current CP-value as well as the current power measured at input B can be displayed.

- Current CP is averaged over a number of days and nights determined by the meter’s configuration. The averaging period can be selected in the interval 5…30 days. The averaging period is set at 7 days, unless otherwise stated by the customer.
  Note: If data of E1 or input B are missing for a logging period, current CP is displayed as 0,0 until the data basis is sufficient.

- The monthly values are calculated as the average of a full month. The month is determined by the selected target date.

- The yearly values are calculated as the average of a full year. The year is determined by the selected target date.

CP display readings

The table below shows the CP readings in ”TECH loop”.

CP (moving average)		2-016-00	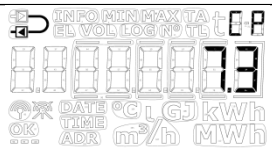
	Current power of input B	2-016-01	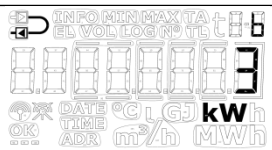
	Averaging period of CP	2-016-02	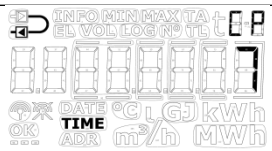
	Yearly date	2-016-03	
	Yearly data	2-016-04	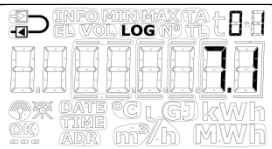
	Monthly date	2-016-05	
	Monthly data	2-016-06	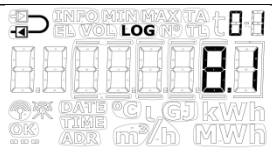

Reset of CP

Situation	Handling
Different units and/or resolutions of E1 and input B	Correction for the difference in CP calculation
Reconfiguration of unit and/or resolution of E1 (B or CCC-code)	Reset of CP calculations [1]
Reconfiguration of unit and/or resolution of input B (GG-code)	Reset of CP calculations [1]
Reconfiguration of presetting of input B	Reset of CP calculations [1]

[1] *Monthly and yearly CP restart, i.e. CP is calculated over just the remaining period until the next logging.* Current *CP is set at 0,0 until the daily log has logged over the configured number of days. (E.g. If the selected number of days is 5, the meter cannot make a calculation over 5 days until the meter has carried out 6 loggings.)*

7.2.1 Measurement of the coefficient of performance (CP) of a gas boiler

If the pulse output of a gas meter is connected to a heat meter, the coefficient of performance of the gas boiler can be measured, in terms of e.g. kWh/Nm^3 gas. A volume resolution which corresponds to the pulse weighting on the gas meter pulse output must then be selected for input B.

7.3 Offset adjustment of temperature sensor measurement

MULTICAL® 403 is available with possible offset adjustment of the temperature sensor measurement, thus increasing the accuracy of the absolute temperature measurement. This is especially relevant in the installation scenario that the meter is to be used for tariff billing based on absolute temperatures. In that case it is an EN1434 requirement that the accuracy of the meter's absolute temperature reading must be within ± 1,0 K. Offset adjustment is extremely relevant in district cooling installations too. In district cooling installations the customer often requires a maximum inlet temperature. Absolute temperature measurement with undesirable inaccuracy can cause the supplier to supply water with a lower inlet temperature than promised, resulting in unnecessary extra costs for the supplier.

Depending on the meter's configuration, offset adjustment can be programmed into the meter from the factory. Offset can also be adjusted after delivery via the meter's "SETUP loop" (see paragraph 6.3) or via METERTOOL HCW. See Technical description for METERTOOL HCW (5512-2097).

Note: Depending on the meter's configuration offset adjustment can be disabled and the menu point in "SETUP loop" will in that case display "Off".

If the temperature sensor set of a meter with offset adjustment is replaced, we recommend that offset is corrected to match the newly connected sensor set. Alternatively, offset should be adjusted to 0,00 K, which means that the function is switched off and does not contribute to an undesirable increase of the error of the absolute temperature measurements.

Temperature sensor offset (t_{r0}) can be adjusted in the interval -0,99…0,99 K according to the meter's approval.

Please be aware of that the required offset adjustment must be entered, not the error of the temperature sensor set.
If the selected temperature sensor set contributes with an error of -0,20 K, the meter's offset must be set at 0,20 K.

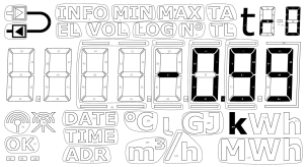

7.4 Bifunctional heat/cooling metering

MULTICAL® 403 is available as heat meter (meter type 2), cooling meter (meter type 5) or bifunctional heat/cooling meter (meter type 3 and 6).

Meter type		
Heat meter (MID modules B+D)		2
Heat/cooling meter (MID modules B+D & TS+DK268)	Θ_{hc} = OFF	3
Cooling meter (TS27.02+DK268)		5
Heat/cooling meter (MID modules B+D & TS27.02+DK268)	Θ_{hc} = ON	6
Country code (language on label, etc.)		XX

If MULTICAL® 403 has been supplied as a heat/cooling meter (meter type 3 and 6), heat energy (E1) is measured at a positive temperature difference (t1>t2), whereas cooling energy (E3) is measured at a negative temperature difference (t1<t2). Temperature sensor t1 (with white marking on cable) is mounted in the inlet, whereas t2 is mounted in the return.

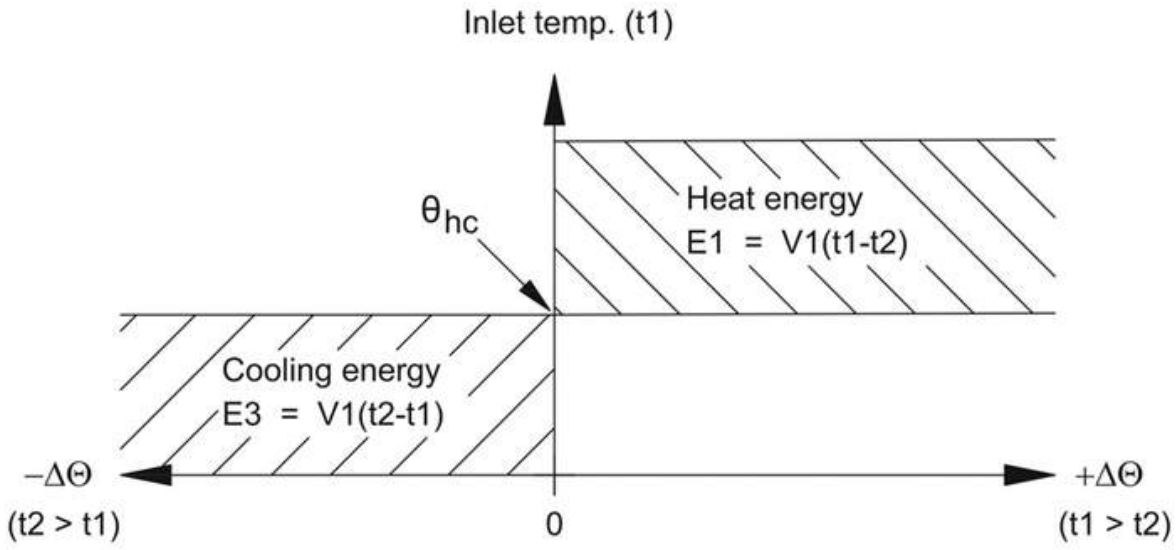

θ_{hc} acts as a limit value for the measurement of heat/cooling energy. With θ_{hc} enabled, heat energy is only measured when t1 is greater than or equal to θ_{hc}. Likewise, cooling energy is only measured if the inlet temperature t1 is lower than θ_{hc}.

In heat/cooling meters, the limit value θ_{hc} should be set to the highest temperature which has appeared in the inlet in connection with cooling, e.g. 25 °C. If the calculator is to be used for billing, θ_{hc} is a legal value and this appears from the display.

Configuration of the function θ_{hc} is only possible in meter type 6. Configuration is possible in the interval 0.01..180.00 °C. In order to disable θ_{hc}, this value must be configured to 250,00 °C. In other meter types than meter type 6, θ_{hc} is permanently "OFF" in the configuration. θ_{hc} is configured via the "SETUP loop" or METERTOOL HCW. See paragraph 6.3 and the technical description of METERTOOL HCW (5512-2097) for further information.

Note: There is no hysteresis in connection with shift between heat and cooling energy measurement ($\Delta\theta_{hc}$= 0,00 K).

7.5 Min/max calculations of power (P) and flow (Q)

MULTICAL® 403 registers minimum and maximum flow and power on both monthly and yearly basis. The registration can be read in full via data communication. Furthermore, the two latest yearly registrations and the latest 12 monthly registrations can be read in ”USER loop”. It depends on the selected display code (DDD-code) whether these registrations are displayed in ”USER loop”. Read more about the DDD-code in paragraph 3.2.4.

The current minimum and maximum registration for the present year and month can be displayed. In addition historical data, i.e. minimum and maximum values registered for previous year and months can be displayed. The dates when minimum or maximum values appeared are displayed in format 20YY.MM.DD. Through serial reading the time (hh.mm.ss) can be included too. Below you see the complete overview of the registers.

Note: Historical readings (logging values) are not part of ”TECH loop”. They are only displayed in ”USER loop”, and only if the DDD-code in question includes these readings.

Flow (V1)	”USER loop”	
	8.1	*Date of max. this year*
	8.2	*Data of max. this year*
	8.3	*Date of max. yearly logger*
	8.4	*Data of max. yearly logger*
	8.5	*Date of max. this month*
	8.6	*Data of max. this month*
	8.7	*Date of max. monthly logger*
	8.8	*Data of max. monthly logger*
	8.9	*Date of min. this year*
	8.10	*Data of min. this year*
	8.11	*Date of min. yearly logger*
	8.12	*Data of min. yearly logger*
	8.13	*Date of min. this month’*
	8.14	*Data of min. this month*
	8.15	*Date of min. monthly logger*
	8.16	*Data of min. monthly logger*

Thermal power (V1)	”USER loop”	
	9.1	*Date of max. this year*
	9.2	*Data of max. this year*
	9.3	*Date of max. yearly logger*
	9.4	*Data of max. yearly logger*
	9.5	*Date of max. this month*
	9.6	*Data of max. this month*
	9.7	*Date of max. monthly logger*
	9.8	*Data of max. monthly logger*
	9.9	*Date of min. this year*
	9.10	*Data of min. this year*
	9.11	*Date of min. yearly logger*
	9.12	*Data of min. yearly logger*
	9.13	*Date of min. this month*
	9.14	*Data of min. this month*
	9.15	*Date of min. monthly logger*
	9.16	*Data of min. monthly logger*

Below you see examples of display readings of the date and data readings. The frames around the date indicate whether the date is connected to yearly or monthly data. In data readings of yearly data the last two digits of the year are marked in frames, whereas the two digits for month are marked for monthly data. Furthermore, the symbols ”MIN” and ”MAX” are shown to indicate whether the values are minimum or maximum values. The symbol ”LOG” is shown for historical readings.

Examples of yearly date and data (max. values) for flow

Date of max. this year

Data of max. this year

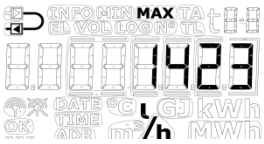

Date of max. yearly logger

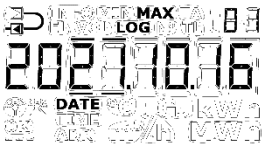

Data of max. yearly logger

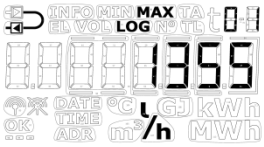

Examples of monthly date and data (min. values) for power

Date of min. this month

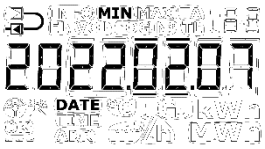

Data of min. this month

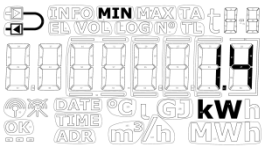

Date of min. monthly logger

Data of min. monthly logger

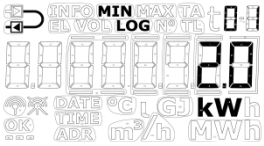

All minimum and maximum values are calculated as the average of a number of current flow or power measurements. After each averaging period the latest value is compared to previous values, and the new value is saved as maximum or minimum if it exceeds the previous maximum value or is lower than the previous minimum value. The averaging period used for all calculations can be selected in the interval 1...1440 min. in leaps of one minute. (1440 min. = 24 hours). The averaging period and the target dates are stated in the order. Read more about order data in paragraph 3.3. If not otherwise stated in the order, the default averaging period of 60 min. is used. This value can later be changed via ”SETUP loop” or via METERTOOL HCW.

Please note the following:

- In the display the date is shown in the format 20YY.MM.DD, but by serial reading the time can be stated too, and the format then becomes YY.MM.DD, hh.mm.ss.

- The averaging period starts the moment the meter is powered, i.e. when the battery is mounted in the meter or when mains supply is switched on. Therefore, the averaging period is not necessarily synchronous with the change of day. Due to this fact the min./max. calculation is immune to the clock setting as the interval is kept intact at e.g. 60 or 1440 min.

7.6 Temperature measurement

Inlet and outlet temperatures are measured by means of an accurately matched Pt500. During each temperature measurement MULTICAL® 403 sends measuring current through each sensor. The current is approx. 0,5 mA for Pt500. Two measurements are carried out in order to suppress possible 50 Hz (or 60 Hz) low-frequency noise picked up via the sensor cables. Furthermore, current measurements are made by internal reference resistors in order to secure optimum measuring stability.

The display presents inlet and outlet temperatures as well as temperature difference in range 0,00 °C to 185,00 °C. The temperature difference is presented in the range 0,01 K to 185,00 K.

By default, the meter has no cut-off for low temperature and thus measures down to 0,01 °C and 0,01 K. If desired, when ordering the meter, a country code can be selected that is programmed with cut-off for temperature difference (ΔΘ) in the area 0,01…2,50 K. It is not possible to program this with METERTOOL. If the meter is programmed with a cut-off of 2,50 K, it will not calculate energy and volume at a temperature difference below 2,50 K.

Note Cut-off for the temperature difference should be distinguished from θ_{hc}, which functions as a limit value of the heat/cooling energy measurement. See paragraph 7.3.

Inlet or outlet temperatures below 0 °C and above 185 °C are indicated as lines in the display, but serial reading includes 0,00 °C and 185,00 °C respectively. If one or both temperature sensors are outside measuring range, the info code is set as shown in the next paragraph.

At negative temperature difference (inlet < outlet) the temperature difference is displayed with a negative sign and cooling energy is calculated. It depends on the selected DDD-code whether this appears from the reading in the display.

Measuring current and power

Measuring current is only sent through the temperature sensors during the short duration of the temperature measurement. The effective power that is deposited in the sensor elements is thus very small, and its influence on self-heating of the temperature sensors is typically less than 1/1000 K.

	Pt500
Measuring current	< 0,5 mA
Peak power	< 0,2 mW
RMS influence (fast mode)	< 2 µW
RMS influence (normal mode)	< 0,4 µW

Average temperatures

MULTICAL® 403 continuously calculates the average temperatures of inlet and outlet (t1 and t2) in °C without decimals, and background calculations E8 and E9 (m^3 x t1 and m^3 x t2) are carried out with every volume calculation (e.g. with every 0,01 m^3 if the meter size is qp 1,5), whereas the display is updated with every integration (depending on L-code). The average calculations are thus volume weighted and can be used directly for checking purposes.

7.7 Information code types

MULTICAL® 403 constantly monitors a number of important functions. If a serious error occurs in measuring system or installation, a flashing “INFO” will appear in the display. The ”INFO” field keeps flashing as long as the error is present no matter which reading you choose. The ”INFO” field automatically disappears when the reason for the error has been removed.

Note: Configuration for ”Manual reset of info code” is not possible in MULTICAL® 403

7.7.1 Information code types

In MULTICAL® 403 each digit of the info code is dedicated to one of the meter’s part elements. For instance the second digit from the left in the display is always related to information on temperature sensor t1. At the same time the info code is divided according to sections so that a reading from left to right consists of: General information, temperature information (t1 and t2), flow information (V1) and information on pulse inputs A and B (In-A and In-B), see table below for an overview of info codes.

Display digit									
1	2	3	4	5	6	7	8	Description	
Info	t1	t2	0	V1	0	In-A	In-B		Bit format[3]
1								No voltage supply [1]	1
2								Low battery level	2
9								External alarm (e.g. via KMP)	4
	1							t1 Above measuring range or disconnected	8
		1						t2 Above measuring range or disconnected	16
	2							t1 Below measuring range or short-circuited	32
		2						t2 Below measuring range or short-circuited	64
	9	9						Invalid temperature difference (t1-t2)	128
				3				V1 Air	256
				4				V1 wrong flow direction[4]	512
				6				V1 > q_s for more than an hour	2048
						8		Pulse input A Leakage in system	4096
						9		Pulse input A. External alarm	16384
							8	Pulse input B Leakage in system [2]	8192
							9	Pulse input B. External alarm	32768

[1] *This info code parameter does not appear from the current info code as it is only active when the meter is without supply. The info code is saved in the info log, and it will appear from the info log that the meter has been without power supply.*

[2] *Info code for leakage at pulse input B, must be actively selected.*

[3] *It is possible to see the information code in bit format using LogView HCW. In case of several simultaneous information codes, the sum of all the codes will be shown. The information code is sent in bit format via data communication as well.*

[4] *This info code is set if there has been flow in the wrong direction for minimum 1% of qp for at least 10 minutes. It is reset again at the first flow measurement with correct flow direction.*

Note: Info codes are configurable. Therefore, it is not certain that all above-mentioned parameters are available in a given MULTICAL® 403. This depends on the selected country code.

7.7.2 Examples of information codes

Flashing ”INFO”
If the information code is different from ”00000000”, a flashing “INFO” will appear in the meter’s display.

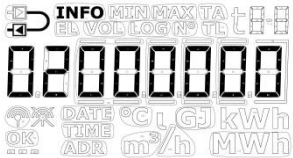

Current information code
The current info code can be displayed by scrolling to the reading using the primary key on the calculator front. When the current info code is displayed ”INFO” stops flashing.

The current info code in the example indicates that t1 is below measuring range or short-circuited.

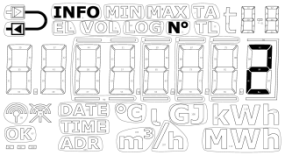

Info-event counter
If you activate the meter’s secondary key when the info code is displayed you are informed how many times the info code has been changed.
The value is increased every time the info code is changed.
The info-event counter of a new meter will be 0 as transport state prevents counting during transportation.

Info logger
If you activate the secondary key again, the info code data logger is displayed.
The first display reading states the date of the latest info code change.

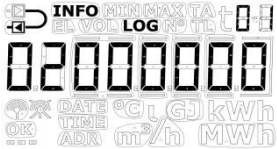

The next activation of the secondary key displays the info code from the above date. Repeated activations of the secondary key alternately induce dates and corresponding info codes.
The data logger saves 50 changes (all 50 changes can be displayed).

Note: The info code is saved in the meter’s data logger too for diagnostic purposes.

7.7.3 Information codes in display and in serial communication

Display

The info code types which are related to the meter's different sensors t1, t2 and V1 will in case of error influence the display readings, to which they are tied. In connection with current values for temperatures, flow and power three horizontal lines will appear in the display, and the energy registers, in which counting is dependent on the sensor function, will not be accumulated. See paragraphs 6 and 7.1.3 for further information on sensor errors.

Temperature sensor error

The error can be due to the sensor being disconnected or short-circuited. An erroneous ΔΘ alone will not be considered a temperature sensor error.

In case of an error in one or more temperature sensors (t1 and t2), the value of the serial communication of the sensor in question will be 0,00 °C (lowest valid temperature) or 185,00 °C (highest valid temperature) respectively, depending on the measurement being below range (sensor short-circuited) or above range (sensor disconnected). The display reading of the sensor in question shows lines in the three digits to the far right in the display, independent of the cause of the error. Decimal points are not included.

The display readings of ΔΘ and current power will also show three lines for errors in one or more temperature sensors. In serial communication the power value will be 0,0 kW.

Flow sensor error

The error can be due to air in the flow sensor (V1) or due to the fact that it has been mounted with the wrong flow direction. V1 > q_s does not prevent the meter from measuring, and is thus not considered an error in this connection.

In case of flow sensor error the flow value will in serial communication be 0 l/h. The display reading of current flow shows lines in the three digits to the far right in the display. Decimal points are not included.

The display reading of current power will also show three lines for flow sensor error. In serial communication the power value will be 0,0 kW.

Serial communication

Bit	Value	Info
0	1	Supply voltage disconnected
1	2	Low battery level
2	4	External alarm (e.g. via KMP)
3	8	t1 Above measuring range or switched off
4	16	t2 Above measuring range or switched off
5	32	t1 Below measuring range or short-circuited
6	64	t2 Below measuring range or short-circuited
7	128	Wrong Δt (t1-t2)
8	256	V1 Air
9	512	V1 Wrong flow direction
10	1024	-
11	2048	V1 Increased flow (flow1 > qs, for more than 1 hour)
12	4096	In-A Leakage in the system
13	8192	In-B Leakage in the system
14	16384	In-A External alarm
15	32768	In-B External alarm

7.7.4 Information codes in transport state

The meter leaves the factory in transport state, i.e. the info codes are active in the display, but not in the meter's data logger. This prevents ”info-event” from counting and saving non-relevant data in the info log during transportation. The first time the meter registers flow after the installation, the info code automatically becomes active.

7.8 Transport state

The meter is in transport state until it makes its first integration.
Transport state means:

- No info codes are saved in the meter’s logger and the info-event counter is not active.
- A power saving measuring sequence is used.
- ”SETUP loop” is accessible, which enables you to configure the meter before commissioning.
  Note: In general ”SETUP loop” is available, it can however be limited by the selected country code.

Please be aware that the access to ”SETUP loop” will be blocked and the meter will leave transport mode if the configuration in ”SETUP loop” is ended by the function “EndSetup”. When the meter has left transport state info codes will be logged and the measuring sequence is changed to the one ordered for the meter (determined by the L-code). The meter cannot revert to transport state, unless a total reset is made. The access to ”SETUP loop” can, however, be opened again by separating calculator top and base, this means breaking the installation seal, see paragraph 4.8.

Radio communication

On delivery the meter is in transport state and the meter’s radio communication is deactivated. The radio is activated by the first integration the meter carries out. In transport state and after commissioning of the meter the radio can be enabled either via ”SETUP loop” or by making a forced dial-up (both front keys are activated until ”CALL” is displayed). Enabling the radio does *not* cause the meter to leave transport state.

Test mode

Access to ”TEST loop” will disable radio communication. In ”TEST loop” an integration or a forced dial-up do *not* enable the radio.

Note: In order to gain access to ”TEST loop” the test seal must be broken and the meter must subsequently be reverified.

Flow chart

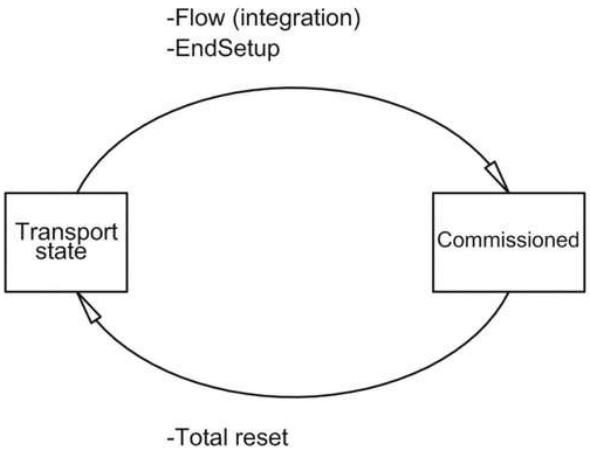

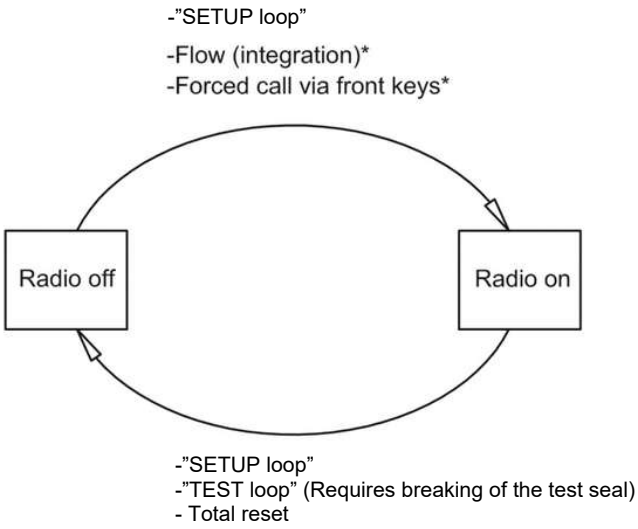

*If the meter is in "TEST loop" the radio remains off at flow (integration) and forced call

7.9 Info and config logger

7.9.1 Info logger

Every time the information code changes, the below-mentioned registers are logged.

Register type	Description
Date (20YY.MM.DD)	Year, month and day of logging time
Clock (hh.mm.ss)	Time
Info	Information code on above date
E1	Heat energy
E3	Cooling energy

It is possible to data read the latest 50 changes of the information code as well as the dates the changes were made. When the information code is read from the display, the latest 50 changes including dates can be read. All of the 50 changes can also be read by means of the PC program LogView HCW.

Info event

Every change of a parameter of the info code results in an info event if the selected country code is configured with the parameter. It is therefore not certain that all parameters result in an info event.

An info event results in accumulation of the info event counter as well as logging in the info logger. This does not apply whilst the meter is in transport state or if the calculator top and base are physically separated.

Reconfiguration of active parameters of the info code will influence future info codes, whereas all logged info codes remain as they were at the time of logging.

7.9.2 Config logger

Every time the configuration is changed, the below-mentioned register types are logged. Thus, it is possible to data read the latest 25 changes of the config log as well as the date the change was made. The meter permits only 25 changes, unless you break the legal seal and carry out a total reset of the meter, which also resets the config log.

Note: The 25th change of configuration must be carried out on the installation site, i.e. either via ”SETUP loop” or via METERTOOL HCW.

Register type	Description
Date (20YY.MM.DD)	Year, month and day of change
Time (hh.mm)	Time
Configuration number	The new configuration number
E1, E3 and V1	Counts are saved just after reconfiguration
Hour counter	Hour counter is saved
t offset	The temperature offset value is saved

The meter will always carry out a config logging if the user has had access to ”SETUP loop”, no matter whether the user has changed the configuration or not.

7.10 Summer/winter time adjustment

MULTICAL® 403 is available with configuration for DST (Daylight Saving Time ~ summer/winter time). The meter's country code determines the DST-configuration algorithm, so that it corresponds to the DST regulations of the country, for which the meter is intended. If the meter is configured with DST and you do not want to use it, the DST-function can be disabled in the PC-program METERTOOL HCW. The DST-function has direct influence on the meter's internal clock and time-controlled tariff limits. Time stamps for loggings of events and values are saved in standard time together with information on the current DST offset. The information on DST offset is removed from all logged time stamps if the DST-function is disabled in the meter, and vice versa if the DST-function is enabled again.

DST and tariffs: The time-controlled tariff limit follows DST offset. For instance the entered tariff limits will be moved an hour forward at DST start and an hour backwards at the end of DST (DK example). If the DST function is disabled after a period in operation, the time limits will follow standard time. Accumulated energy in the tariff registers remains unchanged, and thus reflects the time limits with enabled DST-function. The same applies visa versa if the DST-function is reactivated.

DST and loggers: Time stamps for logging will always follow the meter's configuration. For instance a meter with enabled DST-function will log data at 00.00 during winter time and at 01.00 a.m. during summer time (DK example). If the DST-function is disabled after delivery and historical logger values are subsequently read, DST offset of previous values will reflect the new configuration and be removed from the time stamp. See the example in the below-mentioned table, read logging times will always reflect the current DST status.

	DST enabled	DST disabled
Logs target date	Logging time	Logging time
1 January	00:00	00:00
1 February	00:00	00:00
1 March	00:00	00:00
1 April	01:00	00:00
1 May	01:00	00:00
1 June	01:00	00:00
1 July	01:00	00:00
1 August	01:00	00:00
1 September	01:00	00:00
1 October	01:00	00:00
1 November	00:00	00:00
1 December	00:00	00:00

DST and max./min. values Time stamps on logging of max./min. values follow standard time. If the time stamp of a value is read, it will be stated with current DST offset. If the DST-function is disabled after delivery, DST offset will be removed from the time stamps of historical values as it is done with the loggers.

DST and serial read-out of logging data: Data can either be read from a register including time in standard time and DST offset as two separate parameters, or alternatively from a register including time comprising DST offset as a parameter. If the DST-function is disabled after delivery, information on DST offset will be removed from time stamps related to the historical values.

8 Flow sensor

Throughout more than 25 years ultrasonic measurement has proved accurate and the most long-term stable measuring principle for heat measurement. Experience from repeated reliability tests carried out in Kamstrup's accredited long-term test equipment and at AGFW in Germany as well as from ultrasonic meters in operation has documented the long-term stability of ultrasonic meters. (see e.g. report on random sampling of flow sensors, Kamstrup A/S doc. No. 5811-060)

8.1 Measuring principles

Within ultrasonic flow measuring there are two main principles: the transit time method and the Doppler method.

The Doppler method is based on the frequency change which occurs when sound is reflected by a moving particle. This is the effect you experience when a car passes you. The sound (the frequency) decreases when the car passes by.

The transit time method used in MULTICAL® 403 utilizes the fact that it takes an ultrasonic signal sent in the opposite direction of the flow longer to travel from sender to receiver than a signal sent in the same direction as the flow.

A piezo-ceramic element is used for transmitting and receiving ultrasound. The thickness of the element changes when exposed to an electric field (voltage) and thereby it functions as a transmitter of ultrasound. When the element is mechanically influenced, it generates a corresponding electric voltage, and thus functions as a receiver of ultrasound.

8.2 Signal path and flow calculation

The most important elements of the signal path in MULTICAL® 403 are shown in *Figure 13*: Piezo-electric elements transmit and receive the ultrasound signal, which is reflected into and through the measuring tube to the receiver . Due to superposition of velocities of water and sound signal, ultrasound spreads faster with the flow than against the flow. As it is proven by the calculations below, the average flow velocity is directly proportional to the transit time difference of ultrasound signals which are sent with or against the flow.

In small meters (q_p 0,6…2,5 m³/h) a construction with a sound path parallel to the pipe axis is used. The emitted sound waves cover the pipe area of these meters reasonably well and thus the measuring signal is stable enough towards flow variations along the pipe diameter. In big meters (q_p 3,5…15 m³/h) a construction with a triangular sound path is used to make sure that flow variations along the pipe diameter are covered too in these meters. The measuring signal here results in a linear integration along the sound path, which levels possible dissymmetry of the flow profile in the meter.

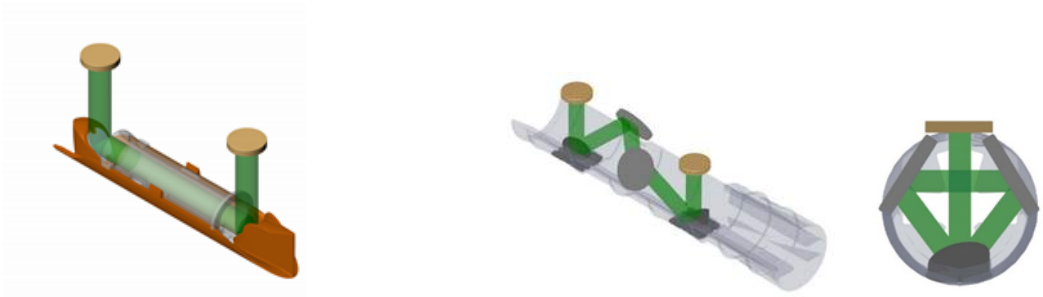

q_p 0,6…2,5 m³/h

Parallel measurement

q_p 3,5…15 m³/h

Triangular measurement

Figure 13: Signal paths in MULTICAL® 403. Sound *signals are sent from the transducers via 2 or 4 reflectors, depending on the construction. For small meters (q_p 0,6…2,5 m³/h) a parallel sound path is sufficient. To cover flow variations along the pipe diameter (flow profile) in the flow sensor a triangular sound path is used in big meters q_p 3,5…15 m³/h). In both constructions the transit times of the signal with and against the flow vary.*

For calculation of the transit time difference we only view a simple example with a sound patch parallel to the measuring pipe. The signal path along the flow is crucial and the transit time to the measuring distance is calculated as:

$$t = \frac{l}{c \pm v}$$

where:

t is the transit time from sender to receiver of the sound signal along the measuring distance l [s]

l is the measuring distance [m]

c is the sound propagation velocity in stagnant water [m/s]

v is the average flow velocity of water [m/s]

The transit time difference can be expressed as the difference between the absolute time of the signal sent against the flow (-) and the signal sent with the flow (+).

$$\Delta t = \frac{l}{c - v} - \frac{l}{c + v}$$

which can also be written as:

$$\Delta t = l \frac{(c+v)-(c-v)}{(c-v)(c+v)} \quad \Rightarrow \quad \Delta t = l \frac{2v}{c^2 - v^2}$$

As $c^2 \rangle\rangle v^2$, v^2 can be omitted and the formula reduced as follows:

$$v = \frac{\Delta t \times c^2}{2l}$$

Thus, we know the basic connection between the average flow velocity and the transit time difference.

The transit time difference in a flow sensor is very small (nanoseconds). Therefore, the time difference is measured as a phase difference between the two 1 MHz sound signals in order to obtain the necessary accuracy.

Furthermore, MULTICAL® 403 takes the influence of the temperature of the water into account i.e. the built-in ASIC uses the sound velocity at the water's current temperature in connection with the flow calculations.

The flow (volume flow rate) is then determined by measuring the transit time difference, calculate the average flow velocity and multiply it by the area of the measuring tube:

$$q = v \times A$$

where:

q is the flow (volume flow rate) $\left[\frac{m^3}{h}\right]$

A Is the area of the measuring pipe $[m^2]$

The volume V passing through is finally calculated as a time integration over the flow (multiplication of (cross section constant) flow by time).

8.3 Flow limits

In the meter's whole working range from min. cut-off and far beyond qs there is a linear connection between the flow rate and the measured water flow.

In practice the highest possible water flow through the meter will be limited by the pressure in the system or by possible cavitation due to too low back pressure.

If the flow is lower than min. cut-off or negative, MULTICAL® 403 does not measure any flow.

According to EN 1434 the upper flow limit q_s is the highest flow at which the flow sensor may operate for short periods of time (< 1 h/day, < 200 h/year) without exceeding max. permissible error. MULTICAL® 403 has no functional limitations during the operating period above q_p. Please note, however, that high flow velocities may cause cavitation, especially at low static pressure. See paragraph 4.5 for further details on operating pressure.

9 Temperature sensors

A platinum resistance thermometer utilizes that the precious metal platinum has a very well-defined correlation between its electrical resistance and the temperature. The correlation between the resistance and the temperature is defined in the standard EN 60 751 (DIN/IEC 751), and tables with examples of the correlation are shown below. On MULTICAL® 403, Pt500 temperature sensors can be used on which the nominal resistance at 0 °C is 500 Ω.

The correlation between the resistance Rt and the temperature t is defined by:

$$R_t = R_0(1 + At + Bt^2)$$

where R_0 indicates the resistance at 0,00 °C while *A* and *B* are constants. The values R_0, *A* and *B* are determined by the verification of the temperature sensor, which is performed in accordance with EN1434-5.

On a heat or cooling meter, a temperature sensor set is used for measuring the temperature difference between inlet and outlet. As each of the two temperature sensors has its own values for R_0, *A* and *B*, the requirement for an approved temperature sensor set in accordance with EN1434-1 is that the maximum difference in percent between the two temperature sensors, Et, in the entire approval area must be no more than:

$$E_t = \pm \left(0{,}5 + 3\frac{\Delta\theta_{min}}{\Delta\theta}\right)$$

where Δθ is the specific temperature difference, and $\Delta\theta_{min}$ is the least approved temperature difference, typically 3 K. The values R_0, *A* and *B* for the individual temperature sensors as well as E_t appear from the certificate of the temperature sensor set.

Pt500										
°C	0	1	2	3	4	5	6	7	8	9
0	500,000	501,954	503,907	505,860	507,812	509,764	511,715	513,665	515,615	517,564
10	519,513	521,461	523,408	525,355	527,302	529,247	531,192	533,137	535,081	537,025
20	538,968	540,910	542,852	544,793	546,733	548,673	550,613	552,552	554,490	556,428
30	558,365	560,301	562,237	564,173	566,107	568,042	569,975	571,908	573,841	575,773
40	577,704	579,635	581,565	583,495	585,424	587,352	589,280	591,207	593,134	595,060
50	596,986	598,911	600,835	602,759	604,682	606,605	608,527	610,448	612,369	614,290
60	616,210	618,129	620,047	621,965	623,883	625,800	627,716	629,632	631,547	633,462
70	635,376	637,289	639,202	641,114	643,026	644,937	646,848	648,758	650,667	652,576
80	654,484	656,392	658,299	660,205	662,111	664,017	665,921	667,826	669,729	671,632
90	673,535	675,437	677,338	679,239	681,139	683,038	684,937	686,836	688,734	690,631
100	692,528	694,424	696,319	698,214	700,108	702,002	703,896	705,788	707,680	709,572
110	711,463	713,353	715,243	717,132	719,021	720,909	722,796	724,683	726,569	728,455
120	730,340	732,225	734,109	735,992	737,875	739,757	741,639	743,520	745,400	747,280
130	749,160	751,038	752,917	754,794	756,671	758,548	760,424	762,299	764,174	766,048
140	767,922	769,795	771,667	773,539	775,410	777,281	779,151	781,020	782,889	784,758
150	786,626	788,493	790,360	792,226	794,091	795,956	797,820	799,684	801,547	803,410
160	805,272	807,133	808,994	810,855	812,714	814,574	816,432	818,290	820,148	822,004
170	823,861	825,716	827,571	829,426	831,280	833,133	834,986	836,838	838,690	840,541
180	842,392	844,241	846,091	847,940	849,788	851,635	-	-	-	-

Pt500, IEC 751 Amendment 2-1995-07

Table 5

9.1 Temperature sensor types

MULTICAL® 403 is deliverable with a Pt500 temperature sensor set. The required temperature sensor set is selected via the meter's type number. The table below shows the available temperature sensor sets. See all of the meter's type number in paragraph 3.1.

Sensor set (Pt500)	Length [mm]	Diameter ø [mm]	Cable length [m]	
No sensor set	-	-	-	00
Direct short sensor set	27,5		1,5	51
Direct short sensor set	27,5		3,0	52
Direct short sensor set	38,0		1,5	21
Direct short sensor set	38,0		3,0	22
Direct sensor set with composite union nut		5,0	1,5	61
Direct sensor set with composite union nut		5,0	3,0	62
Direct sensor set with composite union nut		5,2	1,5	71
Direct sensor set with composite union nut		5,2	3,0	72
Pocket sensor set		5,8	1,5	81
Pocket sensor set		5,8	3,0	82
Pocket sensor set		6,0	1,5	91
Pocket sensor set		6,0	3,0	92

9.2 Cable effect

For smaller and medium-sized heat meters, there is often only a need for a relatively short cable length to the temperature sensors which is why 2-wire temperature sensor sets can be used with advantage as the short cable only contributes to a minor increase of the shown absolute temperature.

The cable length and the cross section must always be the same for the two temperature sensors that are used in a temperature sensor set for a heat meter, and the delivered length must not be either shortened or extended.

The limitations, which are related to the use of 2-wire temperature sensor sets in accordance with EN 1434-2, are shown in the table below.

Cable cross section [mm²]	Pt500 sensors	
	Max. cable length [m]	Temperature increase [K/m] *Copper at 20 °C*
0,25	10	0,090

Table 6

Kamstrup A/S supplies Pt500 sensor sets with up to 10 m cable (2 x 0,25 mm²)

9.3 Installation

9.3.1 Identification of inlet and outlet temperature sensors

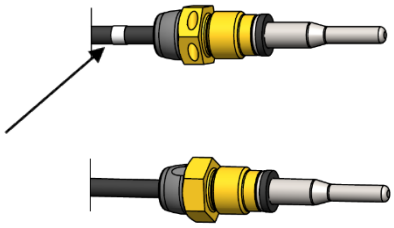

To make it easier to carry out a correct installation, the inlet temperature sensor is equipped with additional two white markings on the cable by which you can easily identify which of the two temperature sensors is the inlet temperature sensor. One of the white markings is placed right after the temperature sensor itself, see the figure above, which makes it easy to check if the inlet temperature sensor is installed in the inlet pipe. The other white marking is placed at the end of the cable, see the figure below, and can, in connection with reverification, be used for checking that the temperature sensors have subsequently been are mounted correctly in the calculator. Identification of inlet and outlet temperature sensors can likewise be seen from the attached sign on the temperature sensors.

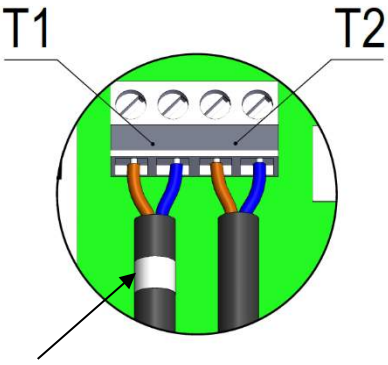

9.3.2 Electrical connection

The two matched two-wire sensors are mounted in connection terminals 5 and 6 (t1) as well as 7 and 8 (t2). The polarity of temperature sensors t1 and t2 is without importance for the functionality.

Also see the position of the terminals below:

	Connection terminal no.	Standard heat and cooling measurement
t1	5-6	Sensor in inlet (white marking)
t2	7-8	Sensor in outlet

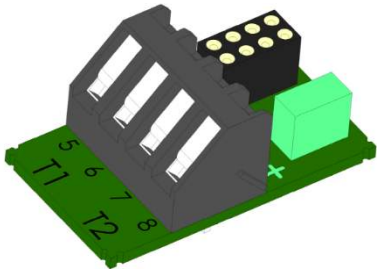

9.3.3 Pt500 direct short sensor set

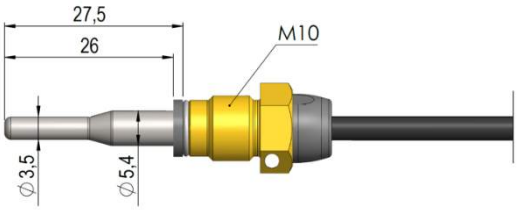

TemperatureSensor 63 direct short DS 27.5 mm temperature sensor has been designed according to the European standard for heat energy meters EN 1434-2. The temperature sensor is designed for direct mounting in the measured medium, i.e. without sensor pocket, by which a particularly fast response to temperature changes in, for example, utility water exchangers is obtained. The temperature sensor tube has a diameter of ø3.5 mm, is made of stainless steel and the temperature sensor element itself is placed in the tube. The temperature sensor is approved for both PN16 and PN25 installations, with PS25 as the maximum pressure. The temperature sensor is based on a 2-wire silicone cable and can thus be used with media temperatures up to 150 °C. One of the temperature sensors is mounted in the flow sensor on delivery and therefore, only the other temperature sensor must be mounted. As shown in *Figure 14* and *Figure 15*, this can, for example, be made with a nipple or a ball valve.

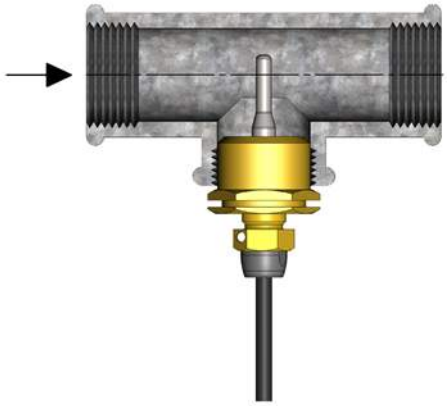

Figure 14

As it appears from *Figure 14*, the direct short sensor DS 27,5 mm can be mounted by means of a R½ or R¾ for M10 nipple in a standard 90° tee.

The direct short temperature sensor is also available in a 38 mm version, called DS 38 mm. Further information about this can be found in the TemperatureSensor SP data sheet. The application possibilities of the DS 27.5 mm and DS 38 mm temperature sensors are shown in *Table 8*.

DN	DS 27,5 mm	DS 38 mm
15	X	
20	X	
25	X	
32		X
40		X

Table 7: The application possibilities of the DS 27.5 mm and DS 38 mm two temperature sensors.

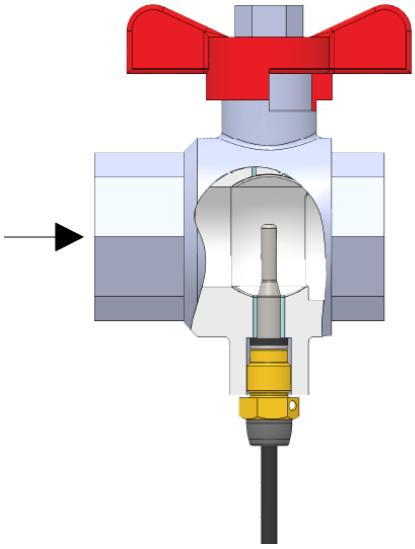

Figure 15

To obtain the best possible serviceability during meter exchange, the direct short sensor can be placed in a ball valve with sensor socket, see *Figure 15*.

Ball valves with sensor socket are available in G½, G¾, G1, all of which fit the DS 27.5 mm sensor as well as in G1¼ and G1½, both fitting the DS 38 mm sensor.

No.	6556-570	6556-571	6556-572
	G½	G¾	G1

No.	6556-526	6556-527
	G1¼	G1½

9.3.4 Pt500 ø5,0 mm / ø5,2 mm sensor types

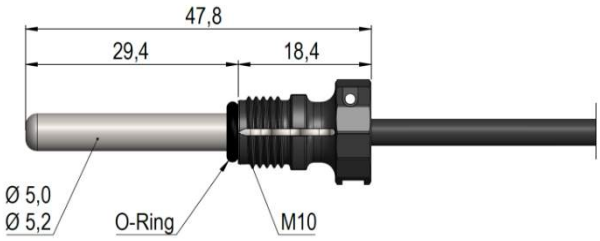

It applies to both the ø5.0 mm and ø5.2 mm temperature sensors that they are delivered with attached composite union nuts which is why they, as a rule, must be used as direct temperature sensors. The temperature sensors are made of stainless steel and have a diameter of ø5.0 mm or ø5.2 mm. The temperature sensors are approved for both PN16 and PN25 installations, with PS25 as the maximum pressure. The temperature sensors are based on a 2-wire silicone cable and can thus be used with media temperatures up to 150 °C. This also applies to the composite union nut that is made of the material PPS. One of the temperature sensors is mounted in the flow sensor on delivery and therefore, only the other temperature sensor must be mounted if you choose to mount both temperature sensors as direct temperature sensors. Asymmetric sensor installation (one temperature sensor installed as a direct temperature sensor and one as a pocket sensor) must only be used if national regulations allow this and never in installations with low differential temperature and/or low water flow.

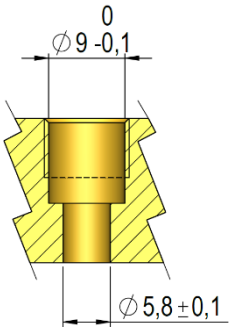

Figure 16: Measurement and tolerance requirements when installing a direct ø5.0 mm or ø5.2 mm temperature sensor.

Regardless of where the direct ø5.0 mm or ø5.2 mm temperature sensor is installed, it is very important that the processing complies with the tolerances shown in Figure 16. If not, there is a risk that the O-ring may not seal correctly. To avoid damage of the O-ring at the installation, it is important to use the guide on the following page when installing the ø5.0 mm or ø5.2 mm temperature sensor as a direct temperature sensor.

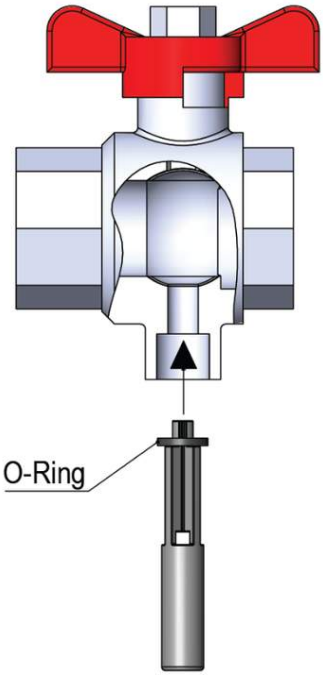

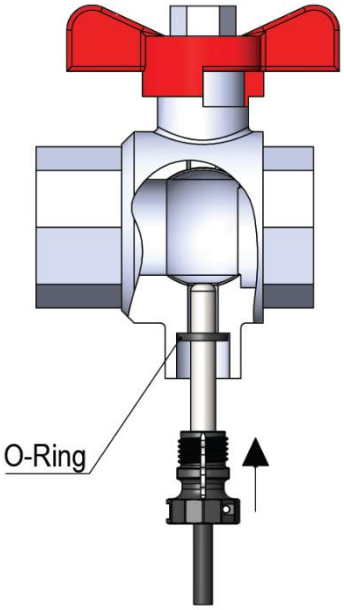

The O-ring duct is used for pushing the O-ring into place
after which the temperature sensor can be pushed to the bottom.

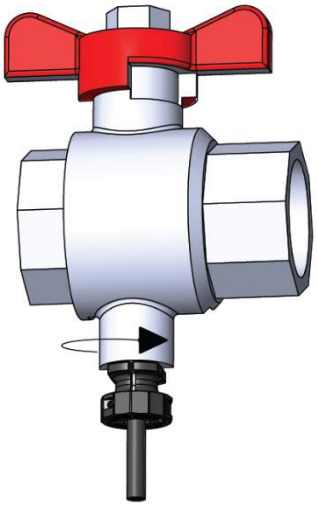

The composite union nut is tightened by hand. No tools must be used.

9.3.5 Pt500 ø5.8 mm / ø6.0 mm pocket sensor set

The ø5.8 mm / ø6.0 mm pocket sensor is a Pt500 wire sensor, designed with a 2-wire silicone cable and completed with a ø5.8 mm or ø6,0 mm shrinkable stainless steel sleeve that protects the sensor element. The steel sleeve is mounted is a sensor pocket (dip pipe). The sensor pockets for the ø5.8 mm temperature sensor is delivered with R½ (conic ½") connection in stainless steel in the lengths 65, 90 and 140 mm. For the ø6.0 mm temperature sensor, the sensor pockets are supplied with G½ (straight ½") connection, also in stainless steel, and can be delivered in the lengths 65, 85,120 and 210 mm. For the ø6.0 mm temperature sensor, which is designed according to EN1434-2, it is particular that this temperature sensor, in the EU, may be used in all approved pockets for ø6 mm temperature sensors that are also designed according to EN1434-2, regardless of the manufacturer. The relevant pockets for ø6 mm temperature sensors are characterised by being marked with "EN1434". The sensor design with separate dip pipe enables exchange of sensors without first shutting off the water supply. In addition, the wide selection of dip pipe lengths ensures that the sensors can be mounted in all common pipe dimensions. The stainless steel pockets can be used for mounting in both PN16 and PN25 installations. At flow speeds above 3 m/s or in a PN40 installation, it is recommended to use a reinforced stainless steel pocket with a diameter of ø10 mm at the tip and that is made of one piece.

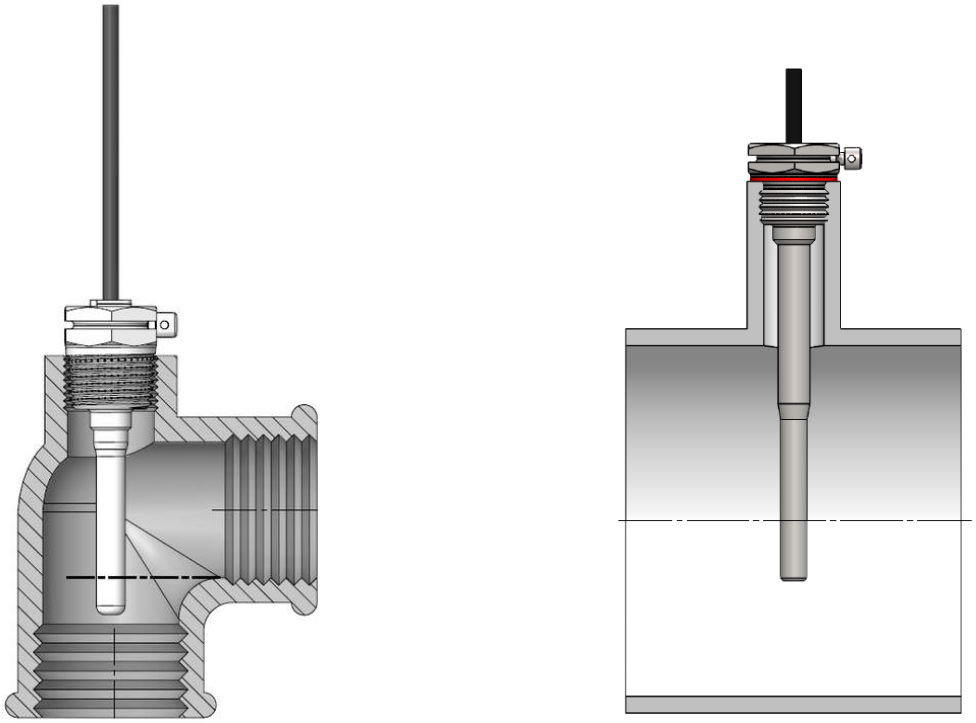

Figure 17: Examples of installation of sensor pocket for ø5.8 mm temperature sensor with R½ thread (to the left) and sensor pocket for ø6.0 mm temperature sensor with G½ thread and copper gasket (to the right).

10 Power supply

MULTICAL® 403 is powered via the two-pole connector in the calculator base. The internal power supply is 3,6 VDC and can be carried out as battery or mains supply via a number of different supply modules from Kamstrup A/S, see the below extract from the type number overview in paragraph 3.1.

Supply	
No supply	0
Battery, 1 x D-cell	2
230 VAC High Power SMPS	3
24 VAC/VDC High Power SMPS	4
Battery, 1 x C-cell IoT	6
230 VAC Supply	7
24 VAC Supply	8
Battery, 2 x A-cells	9

All supply modules have been evaluated in connection with the extensive type tests, to which MULTICAL® 403 has been subjected, and it is not permissible to use other supply modules than the ones mentioned above. The supply modules are covered by the CE-marking and the factory guarantee of the meter.

Note: The modules must not be connected to direct voltage (DC), however except for module no. 4 “24 VAC/VDC High Power SMPS”.

10.1 Battery, 2 x A-cells

Battery supply for MULTICAL® 403 can consist of a supply module, which uses 2 x A-cell lithium batteries (Kamstrup type 403-0000-0000-900). No tools are required in order to mount or replace the battery module. Each battery cell has a lithium content of approx. 0,9 g, which excepts the module from being subject to regulations for transportation of dangerous goods.

The battery lifetime depends on factors like ambient temperature and meter configuration, an indication of battery. Lifetime is thus a realistic estimate.

10.2 Lithium battery, 1 x D-cell

In order to obtain the longest possible battery lifetime MULTICAL® 403 can be fitted with 1 x D-cell lithium battery (Kamstrup type 403-0000-0000-200). No tools are required in order to mount or replace the battery module. The lithium content of the battery cell is approx. 4,5 g, which makes the battery subject to regulations on transportation of dangerous goods, see document 5510-408_DK-GB-DE.

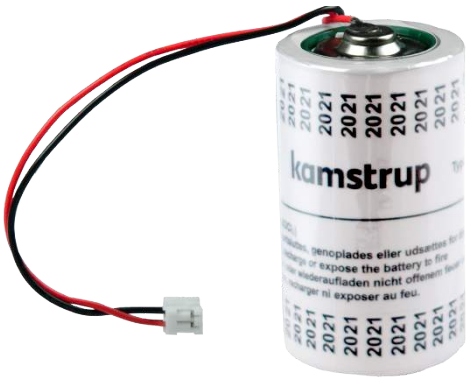

The battery lifetime depends on factors like ambient temperature and meter configuration, an indication of battery lifetime is thus a realistic estimate.

10.3 Lithium battery, 1 x C-cell IoT

For particularly current-demanding applications such as the battery operation of NB-IoT modules, a C-cell IoT (Kamstrup type HC-993-06) must be used. This battery package includes a lithium C-cell and a special capacitor that helps the battery to deliver high pulse currents.

10.4 Battery lifetimes

Overview, estimated lifetime [years], for differently configured MULTICAL® 403.

	Normal mode (32 s.) Adaptive mode (4-64 s.)		Fast mode (4 s.)	
	Wall mounted Battery < 30 °C	Mounted on flow sensor Battery < 40 °C	Wall mounted Battery < 30 °C	Mounted on flow sensor Battery < 40 °C
Type no.: HC-000-00 Without module	1 x D-cell: 16 years 2 x A-cells: 9 years	1 x D-cell: 14 years 2 x A-cells: 8 years	1 x D-cell: 13 years 2 x A-cells: 7 years	1 x D-cell: 11 years 2 x A-cells: 6 years
Type no.: HC-003-10 Data Pulse, inputs (In-A, In-B)				
Type no.: HC-003-11 Data Pulse, outputs (Out-C, Out-D)				
Type no.: HC-003-20 Wired M-Bus, inputs (In-A, In-B)				
Type no.: HC-003-21 Wired M-Bus, outputs (Out-C, Out-D)				
Type no.: HC-003-30 Wireless M-Bus, inputs (In-A, In-B), 868 MHz				
Type no.: HC-003-31 Wireless M-Bus, outputs (Out-C, Out-D), 868 MHz				
Type no.: HC-003-50/51 Low Power Radio, inputs (In-A, In-B), 434 MHz	1 x D-cell: 14 years 2 x A-cell: 6 years	1 x D-cell: 12 years 2 x A-cell: 5 years	1 x D-cell: 12 years 2 x A-cell: 5 years	1 x D-cell: 10 years 2 x A-cell: 4 years
Type nr.: HC-003-56 NB-IoT inputs (In-A, In-B)	CE-level 0: up to 12 years CE-level 1: up to 11 years CE-level 2: up to 6 years	CE-level 0: up to 12 years CE-level 1: op til 11 years CE-level 2: op til 6 years	CE-level 0: up to 9 years CE-level 1: up tol 8 years CE-level 2: up to 5 years	CE-level 0: up to 9 years CE-level 1: up to 8 years CE-level 2: up to 5 years

Modules which are not shown in the table requires mains supply. See the overview of supply options for modules in section 11.5.

Conditions for above-mentioned calculations of battery lifetime:

- Pulse outputs: Pulse duration: 32 ms
- Standard CCC-code
- Average flow: 30 % of q_p.
- Data reading: Max. one reading per hour
- M-Bus Max. one reading every 10 seconds
- Integration modes (L-code) 1, 2 or 3 have been selected, which means that the display remains on.
- Data reading on module HC-003-50 max 2 times per month

Longer battery lifetimes than those mentioned above can be obtained, e.g. by:

- Configuring the display to switch off 8 min. after the latest activation of a key by selecting integration modes (L-code) equal to 5, 6 or 7.
- Carry out M-Bus reading at longer intervals than 10 s.

Please contact Kamstrup A/S for further information.

10.5 230 VAC supply module

This module is galvanically separated from the 230 VAC supply, the module is adjusted to direct connection to the electricity network. The module includes a double-chamber safety transformer and fulfils double-isolation requirements when the calculator top is mounted on the calculator base. If the supply is interrupted, the module will keep the meter powered for a few minutes.

If connected to 230 VAC the whole installation must fulfil current national regulations. Connection/disconnection of the module can be carried out by the meter installer, please note, however, that work on fixed installations, including any intervention in the fuse box, must be carried out by an authorized electrician.

10.6 24 VAC supply module

This module is galvanically separated from the 24 VAC supply, the module is adjusted for industrial installations and installations powered by a separate 230/24 V safety transformer, for instance mounted in a control panel. The module includes a double-chamber safety transformer and fulfils double-isolation requirements when the calculator top is mounted on the calculator base. If the supply is interrupted, the module will keep the meter powered for a few minutes.

The whole installation must fulfil current national regulations. Connection/disconnection of the module can be carried out by the meter installer, whereas installation of the 230/24 VAC safety transformer in a control panel as well as other fixed installations must be carried out by an authorized electrician.

10.7 230 VAC high-power SMPS

This module is galvanically separated from the 230 VAC supply, the module is adjusted to direct connection to the electricity network. The module is constructed as a Switch Mode Power Supply, which complies with the double insulation requirements when the calculator top is mounted on the calculator base. When disconnecting the supply, the module will only keep the meter supplied for a few seconds.

If connected to 230 VAC the whole installation must fulfil current national regulations. Connection/disconnection of the module must be carried out by the meter installer. However, note that work on fixed installations, including any intervention in the fuse box, must be carried out by an authorized electrician.

10.8 24 VAC/VDC high-power SMPS

This module is galvanically separated from the 24 VAC/VDC supply, the module is adjusted to industrial installations and installations powered by a separate 230/24 V safety transformer, for instance mounted in a control panel. The module is constructed as a Switch Mode Power Supply, which complies with the double insulation requirements when the calculator top is mounted on the calculator base. When disconnecting the supply, the module will only keep the meter supplied for a few seconds.

The whole installation must fulfil current national regulations. Connection/disconnection of the module can be carried out by the meter installer, whereas installation of the 230/24 VAC safety transformer in a control panel as well as other fixed installations must be carried out by an authorized electrician.

10.9 Power consumption of mains connected meter

The gained power of meters connected to 24 VAC/VDC or 230 VAC appears from the marking on the meter's front. The marking states an average maximum value for the meter's gained power, and over a period the power will not exceed the marking. For instance short periods with data communication require a short-term increase of the energy consumption, whereas longer periods without data communication require less energy. The table shows examples of accumulated yearly consumption for MULTICAL® 403 with various supply types. For battery supplied meters, see paragraph 10.4 concerning battery lifetimes.

	MULTICAL® 403 connected to 24 VAC incl. transformer (6699-403)	MULTICAL® 403 connected to 24 VAC excl. transformer	MULTICAL® 403 direct connected to 230 VAC
Gained power [W]	< 1.5 W	< 1 W	< 1 W
Apparent power [VA]	<6 VA	<7 VA	<11,5 VA
Yearly consumption [kWh]	Approx. 13 kWh	Approx. 9 kWh	Approx. 9 kWh

10.10 Safety transformer 230/24 VAC

The supply modules for 24 VAC are adjusted for use with a 230/24 VAC safety transformer e.g. Kamstrup type 6699-403, which is mounted in a control panel or another separate capsuling. Regarding power consumption using a safety transformer in connection with 24 VAC supply modules see paragraph 10.9.

Maximum cable length between 230/24 VAC transformer e.g. Kamstrup type 6699-403 and MULTICAL® 403.

Cable type	Maximum length
2 x 0,75 m	50 m
2 x 1,5 mm²	100 m

10.11 Supply cables for supply module

MULTICAL® 403 can be supplied with supply cable type H03VV-F2[1] 2 x 0,75 mm² to be used for both 24 VAC/VDC and 230 VAC, if required by the customer. The supply cable to the meter must not be protected by a larger fuse than permitted, 6 A fuse for 2 x 0,75 mm² cable (accessory from Kamstrup A/S, type 5000-286). Alternatively a 2 x 1,0 mm² supply cable can be used with a 10 A fuse.

In connection with other installation types or if a larger fuse than 10 A is required, it is necessary to consult a certified electrician for an evaluation of how the type of installation in question should be carried out in terms of safety.

[1] H03VV-F2 is the type designation of PVC-isolated cable, with a nominal voltage of 300/300 V and a max. temperature of 70 °C. During installation please remember to keep sufficient distance to hot parts of the installation.

10.12 Retrofitting and exchange of supply modules

Supply modules can be freely exchanged within the possible options in the type number of MULTICAL® 403. For example, it can be an advantage, for a period of time, to switch a mains connected supply module to battery supply in a building that has varying mains supply due to restoration or construction work. However, in some cases, battery supply is not a practical option, e.g. in connection with frequent data communication. It is always possible to exchange from battery supply to mains supply without reconfiguration.

The supply type with which Kamstrup A/S delivered MULTICAL® 403 is permanently laser engraved on the meter. When exchanging the installed supply module, the new supply module is delivered from Kamstrup A/S with labels for fixing to MULTICAL® 403. The label must correspond to the installed supply module, see *Figure 18*. The label is fixed to the area marked *Figure 19* so that it covers any previously imprinted supply description.

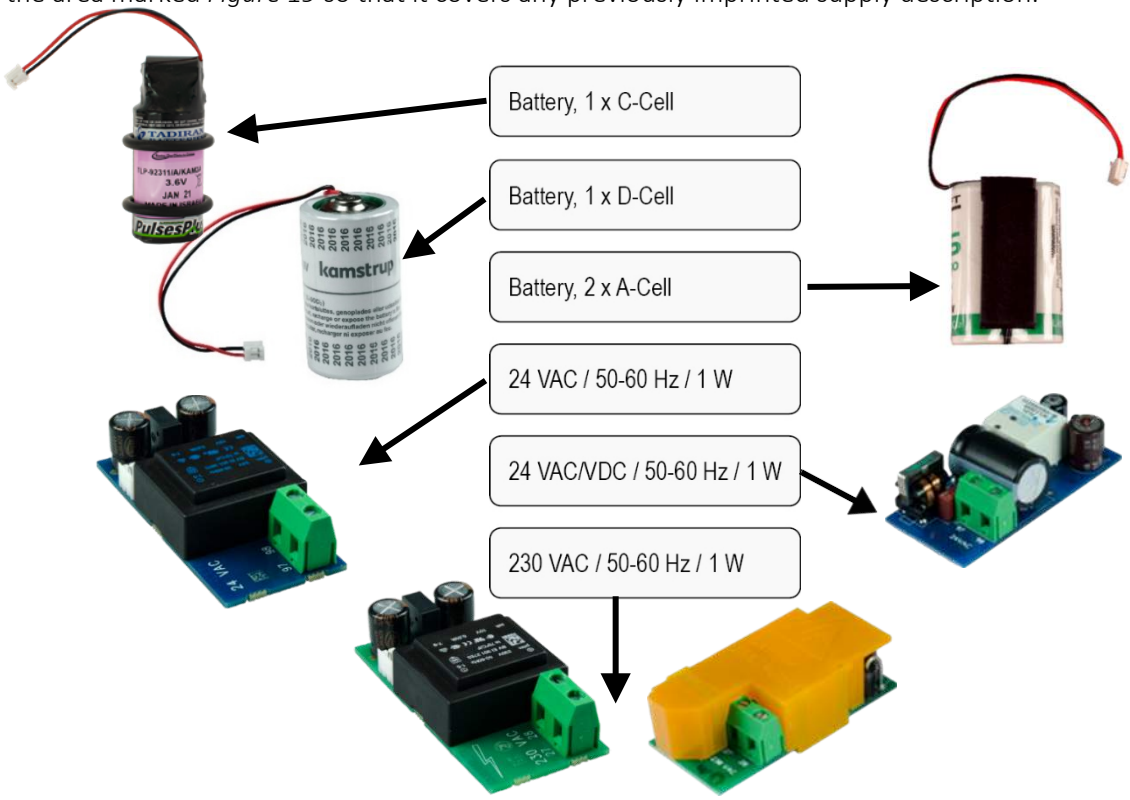

Figure 18 - Choice of correct label for installed supply type

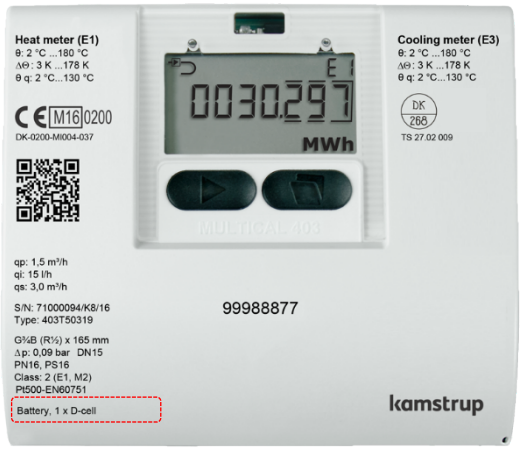

Figure 19 - Correct position of label on MULTICAL® 403

10.13 Data-backup in case of interruption of supply

MULTICAL® 403 is fitted with a small lithium battery (BR1632) as backup of the meter's internal clock in case of interruption of the supply. Independent of the mounted supply module the meter is equipped with functionality which saves all current register counts in case the voltage of the internal 3,6 VDC supply is below 3,1 VDC. When the supply is re-established, the meter continues counting from the value, which was saved when the supply was interrupted.

11 Communication modules

MULTICAL® 403 has room for one communication module.

All modules are part of the type approval of the MULTICAL® 403.

Only type-approved modules must be used, as CE-declaration and factory warranty depends hereof.

The meter automatically detects whether a module has pulse-inputs or pulse-outputs.

Type number	Module name	
HC-003-10	Data Pulse, inputs (In-A, In-B)	
HC-003-11	Data Pulse, outputs (Out-C, Out-D)	
HC-003-20	Wired M-Bus, inputs (In-A, In-B)	
HC-003-21	Wired M-Bus, outputs (Out-C, Out-D)	
HC-003-22	Wired M-Bus, Thermal Disconnect	"#%
HC-003-30	Wireless M-Bus, inputs (In-A, In-B), 868 MHz	&
HC-003-31	Wireless M-Bus, outputs (Out-C, Out-D), 868 MHz	&
HC-003-32	linkIQ/wM-Bus, inputs (In-A, In-B), EU	&
HC-003-33	linkIQ/wM-Bus, outputs (Out-C, Out-D), EU	&
HC-003-34	wM-Bus, inputs (In-A, In-B), 912,5/915/918,5 MHz	&
HC-003-40	Analog outputs 2 x 0/4…20 mA	"#
HC-003-42	KNX Comminication	"
HC-003-43	PQT Controller	"#
HC-003-50	Low Power Radio, inputs (In-A, In-B), 434 MHz	&%
HC-003-51	Low Power Radio GDPR, inputs (In-A, In-B), 434 MHz	&%
HC-003-53	LoRaWan (Elvaco), 868 MHz	&
HC-003-56	NB-IoT, inputs (In-A, In-B)	&:$
HC-003-58	NB-IoT (Elvaco)	&:$
HC-003-66	BACnet MS/TP, inputs (In-A, In-B)	"
HC-003-67	Modbus RTU, inputs (In-A, In-B)	"
HC-003-81	BACnet IP, inputs (In-A, In-B)	$
HC-003-82	Modbus/KMP TCP/IP, inputs (In-A, In-B)	$
HC-003-83	READy Ethernet, input (In-A, In-B)	$

"The module requires as a minimum that the meter is mains-supplied
$The module requires that the meter is mains-supplied with a High Power supply
The module requires an external power supply
% See Module datasheet for required coding in meter
& The module requires an antenna, see chapter **Mounting of antenna**
:Lithium battery C-cell with special capacitor

11.1 Marking on communication modules

All module covers are marked, with clear indication on how to connect signal wires, sensors, power supplies etc. to ensure correct function of the module.

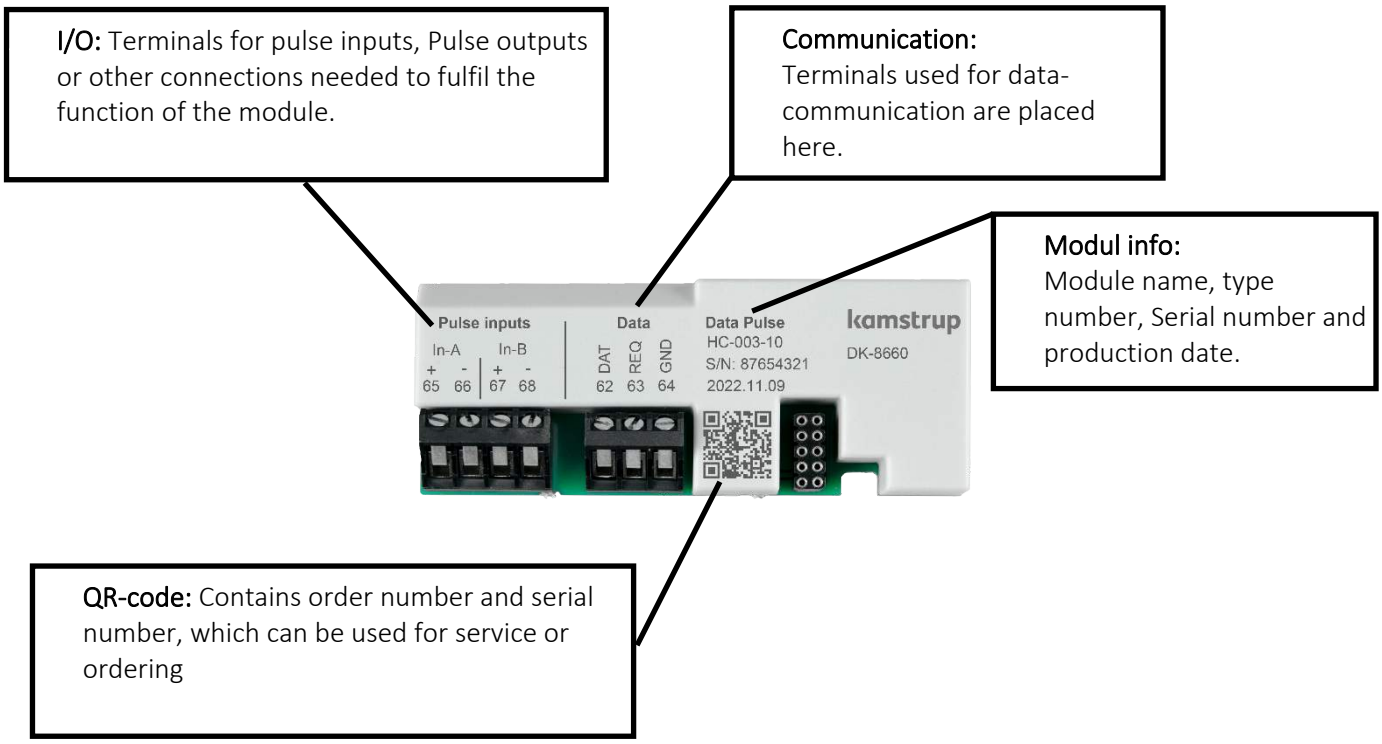

Radio communication modules only have the I/O terminals and a connector for antenna.

For further information on the modules, please refer to their respective datasheets.

For Pulse inputs, see chapter 3.2.6

For Pulse outputs, see chapter 3.2.9

11.2 Modules

11.2.1 HC-003-10: Data Pulse, inputs (In-A, In-B)

Data Pulse module enables direct communication to the meter using the KMP protocol.

The module requires a special Kamstrup adapter cable for either RS-232 or USB in order to exchange data.

For information about the KMP protocol, see chapter 12.3

11.2.2 HC-003-11: Data Pulse, outputs (Out-C, Out-D)

Data Pulse module enables direct communication to the meter using the KMP protocol.

The module requires a special Kamstrup adapter cable for either RS-232 or USB in order to exchange data.

For information about the KMP protocol, see chapter 12.3

11.2.3 HC-003-20: Wired M-Bus, inputs (In-A, In-B)

Wired M-Bus enables communication to battery supplied meters, without affecting the battery lifetime.

The Wired M-Bus module supports primary, secondary and enhanced secondary M-Bus addressing. The module supports automatic baud rate selection among 300,2400,9600 and 19200 baud.

A large selection of datagrams for various applications can be configured into the M-Bus module.

11.2.4 HC-003-21: Wired M-Bus, outputs (Out-C, Out-D)

Wired M-Bus enables communication to battery supplied meters, without affecting the battery lifetime.

The Wired M-Bus module supports primary, secondary and enhanced secondary M-Bus addressing. The module supports automatic baud rate selection among 300,2400,9600 and 19200 baud.

A large selection of datagrams for various applications can be configured into the M-Bus module.

11.2.5 HC-003-22: Wired M-Bus, Thermal Disconnect

Thermal Disconnect enables remote control of flow either for energy-management, or for maintenance purposes.

The Thermal Disconnect controls a thermal valve through commands sent via the wired M-bus.

11.2.6 HC-003-30: Wireless M-Bus, inputs (In-A, In-B)

The Wireless M-Bus module has been developed for Wireless M-Bus systems operating within the licence free band of 868 MHz.

Communication is either C-mode or T-mode according to EN13757-4. The Wireless M-Bus module supports individual encryption. Common encryption key is only available upon request.

A large selection of datagrams for various applications can be configured into the Wireless M-Bus module.

11.2.7 HC-003-31: Wireless M-Bus, outputs (Out-C, Out-D)

The Wireless M-Bus module has been developed for Wireless M-Bus systems operating within the licence free band of 868 MHz.

Communication is either C-mode or T-mode according to EN13757-4. The Wireless M-Bus module supports individual encryption. Common encryption key is only available upon request.

A large selection of datagrams for various applications can be configured into the Wireless M-Bus module.

11.2.8 HC-003-32: linkIQ/wM-Bus, inputs (In-A, In-B), EU

This module has been designed with focus on the newest demands for wireless reading. It has an increased transmit power which ensures a better range and still ensures a long battery life. The module can be configured as either wM-Bus (868MHz) or linkIQ (868-870MHz) in both configurations it is still possible to reconfigure the module using C2.

11.2.9 HC-003-33: linkIQ/wM-Bus, outputs (Out-C, Out-D),EU

This module has been designed with focus on the newest demands for wireless reading. It has an increased transmit power which ensures a better range and still ensures a long battery life. The module can be configured as either wM-Bus (868MHz) or linkIQ (868-870MHz) in both configurations it is still possible to reconfigure the module using C2.

11.2.10 HC-003-34: wM-Bus, inputs (In-A, In-B),912,5/915/918,5 MHz

This module has been developed for Wireless M-Bus systems operating within the licence free band in the range 912.5…918.5 MHz.

The modules fulfil the requirements of the M-Bus standard EN 13757:2013.

The module can be configured with different datagrams.

11.2.11 HC-003-40: Analog outputs 2 x 0/4…20 mA

Analog outputs are often used to pass information to PLC's or similar equipment.

The Analog outputs is based on flow, power or temperatures from the meter. The Analog outputs are individually scale able and configurable as either 0...20 mA or 4...20 mA.

11.2.12 HC-003-42: KNX Comminication

The order number for the KNX module for MULTICAL® 403/603/803 is 87970.

The name is BCU-WMZ-KAM-MC603-c-FW.

' Please note that this module is not supplied by Kamstrup, and that questions about this should be addressed to Lingg & Janke OHG, Germany.

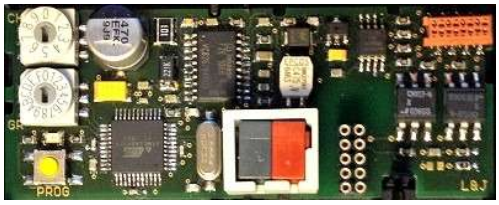

11.2.13 HC-003-43: PQT Controller

The PQT Controller is for application to optimize energy consumption. The PQT Controller reads the flow, power and temperatures from the meter and together with the configured setpoints the PQT Controller steers an attached motorized valve.

11.2.14 HC-003-50: Low Power Radio, inputs (In-A, In-B), 434 MHz

The Low Power Radio module enables reading of meters via radio-systems operating in the 434 MHz band.

Low Power Radio is designed for Walk-by/Drive-by but are prepared to participate into a Kamstrup radio mesh-network, facilitating automatic transfer of data to the reading system through the network routers and concentrators.

The reading system decides what data to read in the meter.

11.2.15 HC-003-51: Low Power Radio GDPR, inputs (In-A, In-B), 434 MHz

The Low Power Radio module enables reading of meters via radio-systems operating in the 434 MHz band.

Low Power Radio is designed for Walk-by/Drive-by but are prepared to participate into a Kamstrup radio mesh-network, facilitating automatic transfer of data to the reading system through the network routers and concentrators.

The reading system decides what data to read in the meter.

To comply to the GDPR directive, data from the meter are encrypted using individual encryption keys.

11.2.16 HC-003-53: LoRaWAN (Elvaco)

LoRaWAN is an IoT module to transfer data in a LoRaWAN network. The module is developed by Elvaco and has been approved for use in Kamstrup MULTICAL xx3 meters.

' Please note that this module is not supplied by Kamstrup, and that questions about this should be addressed to Elvaco AB.

.

11.2.17 HC-003-56: NB-IoT, inputs (In-A, In-B)

The NB-IoT (Narrow Band Internet of Things) module is a point-to-point communication module, that transmits data directly from the meter back to meter reading database using the existing mobile NB-IoT infrastructure.

It is very flexible communication platform that can be used for both battery or main supplied meters, as the transmission interval and datagram can be configured/designed according to customer wishes.

Data can be delivered to our own READy reading solution or to a 3rd party reading solution.
To comply to the GDPR directive, data from the meter are encrypted using individual encryption keys.

11.2.18 HC-003-58: NB-IoT (Elvaco)

NB-IoT module for transfer of data in NB_IoT netvorks. The module is developed by Elvaco and has been approved for use in Kamstrup MULTICAL xx3 meters.

' Please note that this module is not supplied by Kamstrup, and that questions about this should be addressed to Elvaco AB.

11.2.19 HC-003-66: BACnet MS/TP, inputs (In-A, In-B)

The BACnet MS/TP module are for use on a RS-485 industrial network. The Module is Compatible with ASHRAE 135 and supports communication speeds up to 115200 bit/s.

BACnet module enables reading of meters by building- and industrial-automation systems

11.2.20 HC-003-67: Modbus RTU, inputs (In-A, In-B)

The Modbus RTU module are for use on a RS-485 industrial network. The Module is Compatible with Modbus implementation guide V1.02 and supports communication speeds up to 115200 bit/s.

Modbus module enables reading of meters by building- and industrial-automation systems.

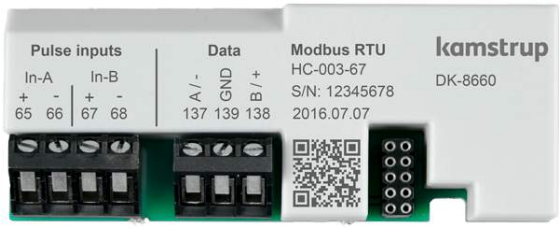

11.2.21 HC-003-81: BACnet IP, inputs (In-A, In-B)

The Module supports BACnet communication via Ethernet.
The BACnet IP enables reading of meters by building- and industrial-automation systems.

11.2.22 HC-003-82: Modbus/KMP TCP/IP, inputs (In-A, In-B)

The module supports two communication protocols via Ethernet, Modbus TCP and KMP.
The Modbus TCP module enables the reading of the meter via building and industry automation and KMP enables the reading of current and logged values as well as configurations.

11.2.23 HC-003-83: READy Ethernet, inputs (In-A, In-B)

READy Ethernet module is a plug-and-play module. Once the meter is commissioned, the module starts sending hourly data on the ethernet network.

Actual values are sent to the utility every hour 24/7/365.

11.3 Reading high resolution registers

When data reading energy and volume (E1, E3, V1), it is possible to select the default resolution with up to 8 significant digits like on the calculator display. It is also possible to select a reading with up to 9 significant digits (ExtraDigit), which is a ten times higher resolution than on the calculator display.

Furthermore, it is possible to read the internal high-resolution registers (“HighRes”).

Below, E1 is used as an example. The same applies to E3 and V1. E1Extra digit is the same value as E1, with just one digit more in the resolution.

Example:

```
E1            =     1.234.567,8 kWh
E1ExtraDigit  =     1.234.567,89 kWh
E1HighRes     =     4.567.890,1 Wh
```

11.4 Mounting of antenna

All radio-based modules must have either an internal or external antenna connected.

!

When mounting an external antenna please ensure that the antenna cable is arranged as shown, to prevent damage of the cable when the meter is assembled.

Before opening the meter to mount a module or an antenna, the power supply must be disconnected.

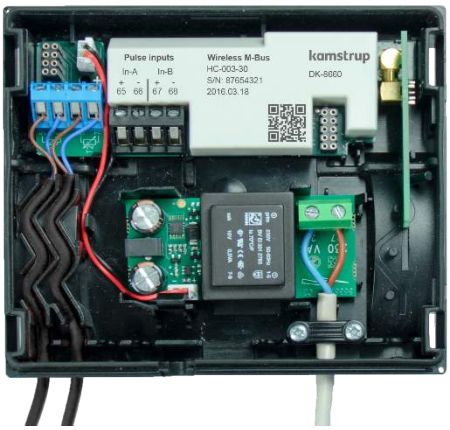

Wireless M-Bus-module with internal antenna

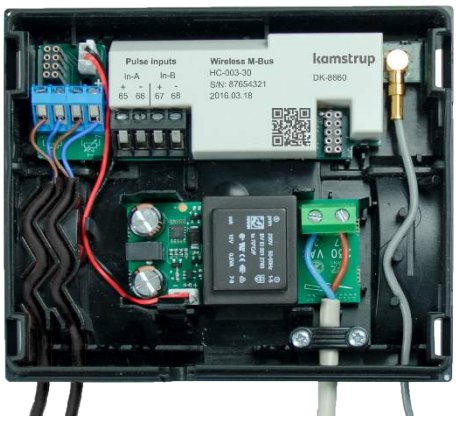

Wireless M-Bus-module with external antenna

11.5 Module retrofitting.

Modules are also sold separately for retrofitting. The modules are pre-configured from the factory and ready to mount in the meter. However, some modules might need to be adapted after installation.

This list indicates which changes of module-configurations are possible when mounted in the meter. Any change can be made using METERTOOL HCW and an optical read-out head.

Type number	Modulname	Note
HC-003-**10**	Data Pulse, inputs (In-A, In-B)	-
HC-003-**11**	Data Pulse, outputs (Out-C, Out-D)	-
HC-003-**20**	Wired M-Bus, inputs (In-A, In-B)	M+D
HC-003-**21**	Wired M-Bus, outputs (Out-C, Out-D)	M+D
HC-003-**22**	Wired M-Bus, Thermal Disconnect	M+D
HC-003-**30**	Wireless M-Bus, inputs (In-A, In-B), 868 MHz	D
HC-003-**31**	Wireless M-Bus, outputs (Out-C, Out-D), 868 MHz	D
HC-003-**32**	linkIQ/wM-Bus, inputs (In-A, In-B), EU	D
HC-003-**33**	linkIQ/wM-Bus, outputs (Out-C, Out-D), EU	D
HC-003-**34**	wM-Bus, inputs (In-A, In-B),912,5/915/918,5 MHz	D
HC-003-**40**	Analog outputs 2 x 0/4…20 mA	A
HC-003-**42**	KNX Comminication	-
HC-003-**43**	PQT Controller	A
HC-003-**50**	Low Power Radio, inputs (In-A, In-B), 434 MHz	D
HC-003-**51**	Low Power Radio GDPR, inputs (In-A, In-B), 434 MHz	D
HC-003-**53**	LoRaWan (Elvaco), 868 MHz	-
HC-003-**56**	NB-IoT, inputs (In-A, In-B)	D
HC-003-**58**	NB-IoT (Elvaco)	-
HC-003-**66**	BACnet MS/TP, inputs (In-A, In-B)	A
HC-003-**67**	Modbus RTU, inputs (In-A, In-B)	A
HC-003-**81**	BACnet IP, inputs (In-A, In-B)	A
HC-003-**82**	Modbus/KMP TCP/IP, inputs (In-A, In-B)	A
HC-003-**83**	READy Ethernet, input (In-A, In-B)	A

M: Bus address/M-Bus Primary and M-Bus secondary addresses.
D: Datagram and module software, only by use of Module Programming cable.
A: All module parameters, datagram and software.
-: Module has no configuration.

Note: Pulse value and pre-set of pulse-inputs are part of the meter configuration.
The Bus-addresses are also stored in the meter configuration, which allows a communication module to be replaced, without assigning the bus-address to the module.

For further information about METERTOOL HCW see technical documentation (5512-2097)

! *Before opening the meter to mount a module or an antenna, the power supply must be disconnected.*

11.6 Supply of modules

Modules		
HC-003-**10**	Data Pulse, inputs (In-A, In-B)	!
HC-003-**11**	Data Pulse, outputs (Out-C, Out-D)	
HC-003-**20**	Wired M-Bus, inputs (In-A, In-B)	
HC-003-**21**	Wired M-Bus, outputs (Out-C, Out-D)	
HC-003-**30, 31, 34**	Wireless M-Bus	
HC-003-**33, 32**	linkIQ/wM-Bus	
HC-003-**50**	Low Power Radio, inputs (In-A, In-B), 434 MHz	
HC-003-**51**	Low Power Radio GDPR, inputs (In-A, In-B), 434 MHz	
HC-003-**53**	LoRaWan (Elvaco), 868 MHz	
HC-003-**56**	NB-IoT, inputs (In-A, In-B)	:
HC-003-**58**	NB-IoT (Elvaco)	
HC-003-**22**	Wired M-Bus, Thermal Disconnect	"
HC-003-**40**	Analog outputs 2 x 0/4...20 mA	
HC-003-**42**	KNX Comminication	
HC-003-**43**	PQT Controller	
HC-003-**66**	BACnet MS/TP, inputs (In-A, In-B)	
HC-003-**67**	Modbus RTU, inputs (In-A, In-B)	
HC-003-**56**	NB-IoT, inputs (In-A, In-B)	$
HC-003-**58**	NB-IoT (Elvaco)	
HC-003-**81**	BACnet IP, inputs (In-A, In-B)	
HC-003-**82**	Modbus/KMP TCP/IP, inputs (In-A, In-B)	
HC-003-**83**	READy Ethernet, input (In-A, In-B)	

! Battery

" Power supply

$ High-power SMPS

: Battery, IoT

An overview of battery lifetimes for MULTICAL® 403 with different configurations is supplied in section 10.4.

12 Data communication

12.1 MULTICAL® 403 Data Protocol

Internal data communication in MULTICAL® 403 is based on the Kamstrup Meter Protocol (KMP) which provides a fast and flexible reading structure and also fulfils future requirements to data reliability.

The KMP protocol is used in all Kamstrup consumption meters launched from 2006 onwards. The protocol is used for the optical interface and via plug pins for the module area. Thus, modules with e.g. M-Bus interface use the KMP protocol internally and the M-Bus protocol externally.

Integrity and authenticity of data
All data parameters include type, measuring unit, scaling factor and CRC16 check sum.
Every produced meter includes a unique identification number.

12.2 Optical interface

The optical read-out head can be used for data communication via the optical interface. The optical read-out head is placed on the front of the calculator just above the IR-diode as shown in the picture below. Please note that the optical read-out head includes a very strong magnet, which should be protected by means of an iron disc when not in use.

Various variants of the optical read-out head appear from the list of accessories (see paragraph 3.2.1).

12.2.1 Power-saving in connection with the optical interface

In order to limit the power consumption of the circuit around the IR-diode, the meter includes a magnet sensor which switches off the circuit when there is no magnet near it.

12.3 Data protocol

Utilities and other relevant companies who want to develop their own communication driver for the KMP protocol can order a demonstration program in C# (.net based) as well as a detailed protocol description (in English language).

13 Test and calibration

MULTICAL® 403 can be tested as a complete energy meter or as a split meter depending on the available equipment.

The high-resolution test registers are read from the display, via serial data reading or via high-resolution pulses.

Before test as a split meter, disassemble the meter and screw off the sensor set. Subsequently, the calculator is tested separately by means of Kamstrup calibration equipment for MC403 and METERTOOL HCW. Flow sensor and temperature sensors are tested separately too. During test of the flow sensor it is unimportant whether the temperature sensors are mounted.

For fast test/calibration of MULTICAL® 403, the meter has a test mode with an extra fast measuring sequence. In test mode heat energy, cooling energy and volume are displayed with higher resolution than normal in order to shorten the test duration.

MULTICAL® 403 uses more current in test mode, but under normal circumstances a meter is only in test mode a few times during its lifetime, and this does not influence the meter's battery lifetime.

13.1 Meter cycle

The meter supports the following three configurable modes with different turnaround times:

Adaptive mode L=1 L=5	Normal mode L=2 L=6	Fast mode L=3 L=7	Test mode	Key activation mode	Measuring cycle Time	Flow measuring interval
			•		4 s.	0.5 s. (8/sequence)
•		•		•	4 s.	1 s. (4/sequence)
•					16 s.	4 s. (4/sequence)
•	•				32 s.	4 s. (8/sequence)
•					64 s.	4 s. (16/sequence)

The flow is measured several times during each sequence. Temperature measurement and all calculations (temperature, flow, volume, energy, etc.) are carried out once per sequence.

Choice of mode

Configuring the meter, you select the integration mode, which the meter can use under ”Integration mode >L<”. No matter the selected Integration mode, the meter can be set in ”Test mode” by breaking the test seal and short-circuiting the test points. The meter remains in test mode until the supply is disconnected and the meter is restarted, or for 9 hours.

13.2 Test

The following paragraph briefly describes the various functions used during test. The description is divided into flow test and calculator test.

13.2.1 Test of flow sensor

The high-resolution volume can be accessed through the serial interface or by reading the display. The high-resolution volume is used during both standing and flying start/stop.

13.2.2 Test of calculator

The calculator supports autointegration, which is used for testing the accuracy of the temperature measurement. Autointegration counts a simulated volume over a given number of integrations with an evenly distributed increase of volume. At each integration, the temperature of the temperature sensors is measured and with the simulated increase in volume, energy is calculated. The energy and an average of the temperature measurement can subsequently be read either from the display or through serial communication.

Autointegration can be started via the serial interface. Further, it can be activated by a keystroke when the meter has been legally unlocked. If the meter has not been unlocked, autointegration can be used, but it does not increment volume and energy in the legal registers. However, this requires that the installation seal is broken.

This function is used in connection with standing start/stop.

13.3 High-resolution volume and energy

High-resolution volume and energy are available in the display and via serial communication. See below table.

Function	Application	Value	Resolution
Display	Standing start/stop	Volume Energy	10 mL 1 Wh
Serially – from latest integration	Standing start/stop	Volume Energy	10 mL 1 Wh
Serially – interpolated instantaneous value with the meter's time stamp	Flying start/stop	Volume Energy	10 mL 1 Wh

Please contact Kamstrup A/S for further information

13.4 Temperature calibration

The temperature measurement is adjusted and calibrated during the production process and it does not require further adjustment in the meter's lifetime. The temperature circuit can only be adjusted in our factory.

13.5 Pulse interface

During test either optical reading head with USB plug (6699-099) for serial reading of high-resolution energy and volume registers, or Pulse Interface (6699-143) with optical reading head and connection unit for high-resolution pulse outputs is used. Do not forget that the meter must be in test mode.

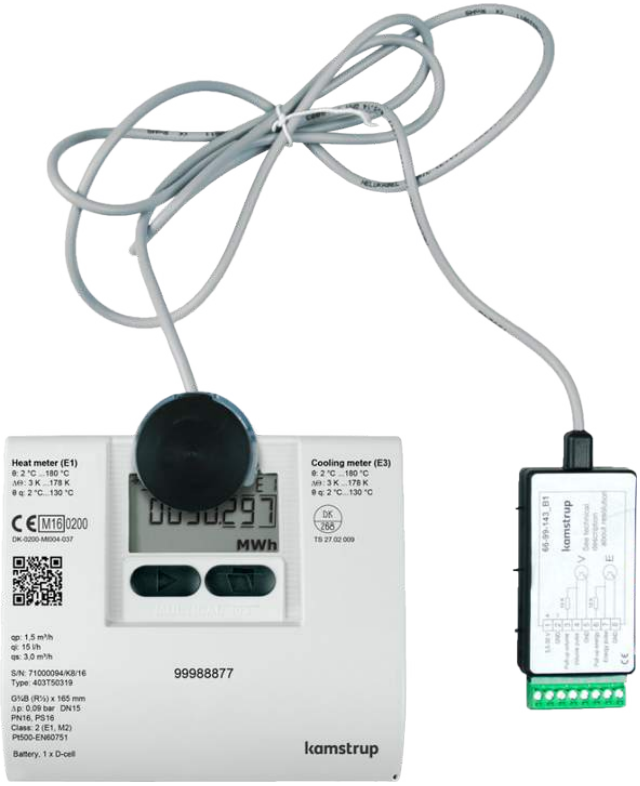

13.5.1 Verification pulses

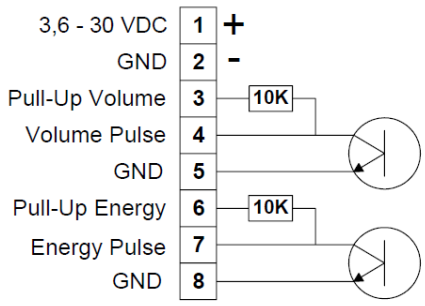

When Pulse Interface type 6699-143 is connected to power supply or battery, the unit is placed on the meter, and the meter is in test mode, the following pulses are transmitted:

- High-resolution energy pulses on connection terminals 7 and 8
- High-resolution volume pulses on connection terminals 4 and 5

Note: For pulse resolution, see table below.

Pulse Interface 6699-143, technical data

Supply voltage	3,6 – 30 VDC
Current consumption	< 15 mA
Pulse outputs	< 30 VDC < 15 mA
Pulse duration	3,9 ms

The resolution of the pulse outputs depends on the specific flow sensor size, see table below.

Flow sensor size qp [m³/h]	Energy [pulses/kWh]	Volume [pulses/litre]	Flow @ 120hz [L/h]
0,6	1000	100	4320
1,5	1000	100	4320
2,5	1000	100	4320
3,5	500	50	8640
6,0	250	25	17280
10	125	12,5	34560
15	125	12,5	34560

13.5.2 Use of high-resolution pulses

The high-resolution energy/volume pulses can be connected to the test stand used for calibration of the meter, or to Kamstrup's Pulse Tester, type 6699-279, as shown in the drawing below.

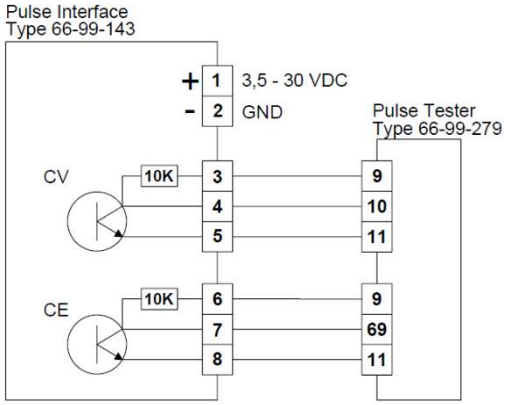

13.6 True energy calculation

During test and verification the heat meter's energy calculation is compared to the "true energy", which is calculated according to the formula of EN1434-1:2015 and OIML R75:2002.

The below-mentioned energy calculator can be supplied electronically by Kamstrup A/S.

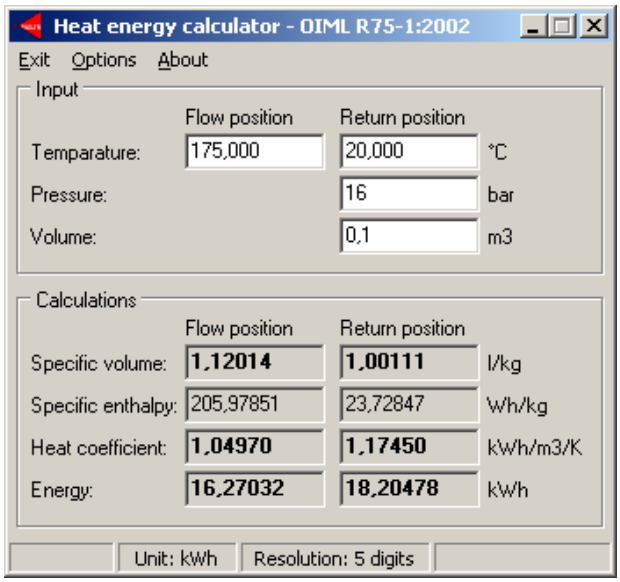

The true energy at the most frequently used verification points is indicated in the table below:

t1 [°C]	t2 [°C]	ΔΘ [K]	Inlet [Wh/0,1 m³]	Outlet [Wh/0,1 m³]
42	40	2	230,11	230,29
43	40	3	345,02	345,43
53	50	3	343,62	344,11
50	40	10	1146,70	1151,55
70	50	20	2272,03	2295,86
80	60	20	2261,08	2287,57
160	40	120	12793,12	13988,44
160	20	140	14900,00	16390,83

14 Calibration of MULTICAL® 403 using METERTOOL HCW

In order to calibrate MULTICAL® 403 calibration equipment is required, and calibration data must be entered in METERTOOL HCW.
See Technical description for METERTOOL HCW, 5512-2097_GB and Technical description for Calibration Unit MC403, 5512-3272_GB.

14.1 Calibration equipment

Calibration equipment is used for calibration of the calculator MULTICAL® 403. Different temperatures are simulated on the two temperature sensor inputs (t1 and t2). Together with the volume simulation (autointegration) they form the basis of the calibration of the energy calculation, E1 and E3.

The equipment was primarily constructed for use in laboratories testing and verifying meters but can also be used for performance testing the meter. METERTOOL HCW (6699-724) is used for configuration, test and calibration.

Calibration equipment for MULTICAL® 403 includes USB interface. During installation this interface creates a virtual COM port which figures on the computer as an optional COM port in METERTOOL HCW. As the virtual COM port only exists when the equipment is connected, the calibration equipment *must* be connected to the computer before METERTOOL HCW is started.

Note: Calibration does not include temperature sensors and flow sensor.

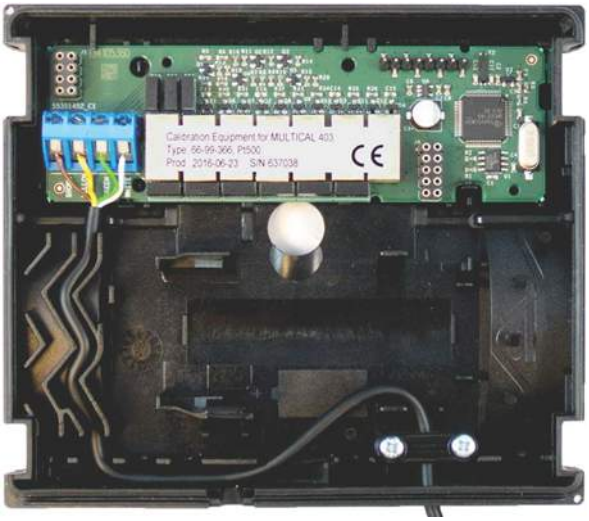

The calibration equipment comes in two different types, depending on the type of MULTICAL® 403 to be calibrated (Pt100 or Pt500). Both calibration equipments calibrate the meter as both heat meter and cooling meter via five calibration points.

Calibration equipment	Temperature, t1 [°C]	Temperature, t2 [°C]	Temperature difference, t1-t2 [K]
2-Wire Pt500 Type No. 6699-366 Standard (EN1434/MID)	44,3	41,0	3,3
	80,0	65,0	15
	160,0	20,0	140
2-Wire Pt100 Type No. 6699-367 Standard (EN1434/MID)	15,0	18,3	-3,3
	6,0	20,0	-14

14.2 Functional description

Calibration equipment, e.g. type 6699-366, which is mounted in a standard MULTICAL® 403 base, includes calibration PCB with connection terminals, microcontroller, control relays and precision resistors. You can simply mount the calculator on this base instead of on the calculator base.

During test the calculator is supplied by the battery. The calibration PCB is powered by the USB. The microcontroller simulates volume based on pulse frequency and the number of pulses per test point selected in METERTOOL HCW. Temperature simulation is obtained by means of fixed precision resistors, which are automatically changed via relays controlled by the microcontroller. After the test, the computer reads all registers in the calculator and compares the values to the calculated reference values.

The calibration result of each test point is stated in percentage and can be saved in the computer under the serial number of the tested MULTICAL® 403. Subsequently a test certificate can be printed.

14.3 Calibration data

The first time METERTOOL HCW and the calibration equipment are used, a number of calibration data must be entered. This is done via the menu ”Adjust calibration unit” in METERTOOL HCW. Calibration data are electronically included in the calibration equipment (also enclosed with the calibration equipment as a certificate on paper). In order to transfer calibration data from equipment to program, select ”Adjust calibration unit” from the menu and activate ”Read”. Calibration data is now transferred to and saved in METERTOOL HCW.

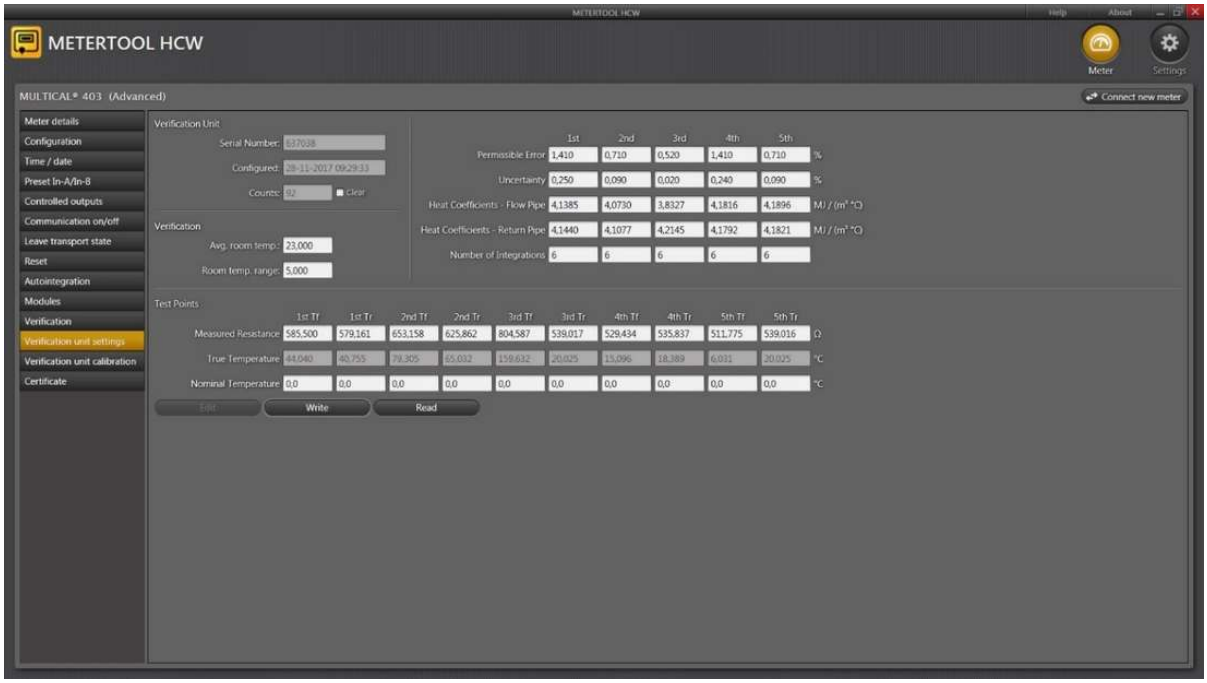

The calibration and program calibration data of the equipment are compared every time the calibration equipment is connected. This is done in order to secure that calibration data in METERTOOL HCW are updated if the calibration data of the equipment have been changed. A change of calibration data can be due to recalibration of the calibration equipment. Calibration data in the calibration equipment can be maintained by changing its calibration data in METERTOOL HCW and clicking on ”Write” to transfer new data to the equipment. In order to avoid unintentional change of calibration data, the function “Write” is protected by a password, which can be obtained from Kamstrup A/S.

Calibration data include test points, permissible error, uncertainty, ambient temperature (fixed value) and number of integrations per test.

Having entered calibration data, the program automatically calculates the true k-factor in accordance with the formula of EN 1434 and OIML R75:2002.

14.4 Start of calibration

You open the calibration menu by activating “calibration” in the main menu.

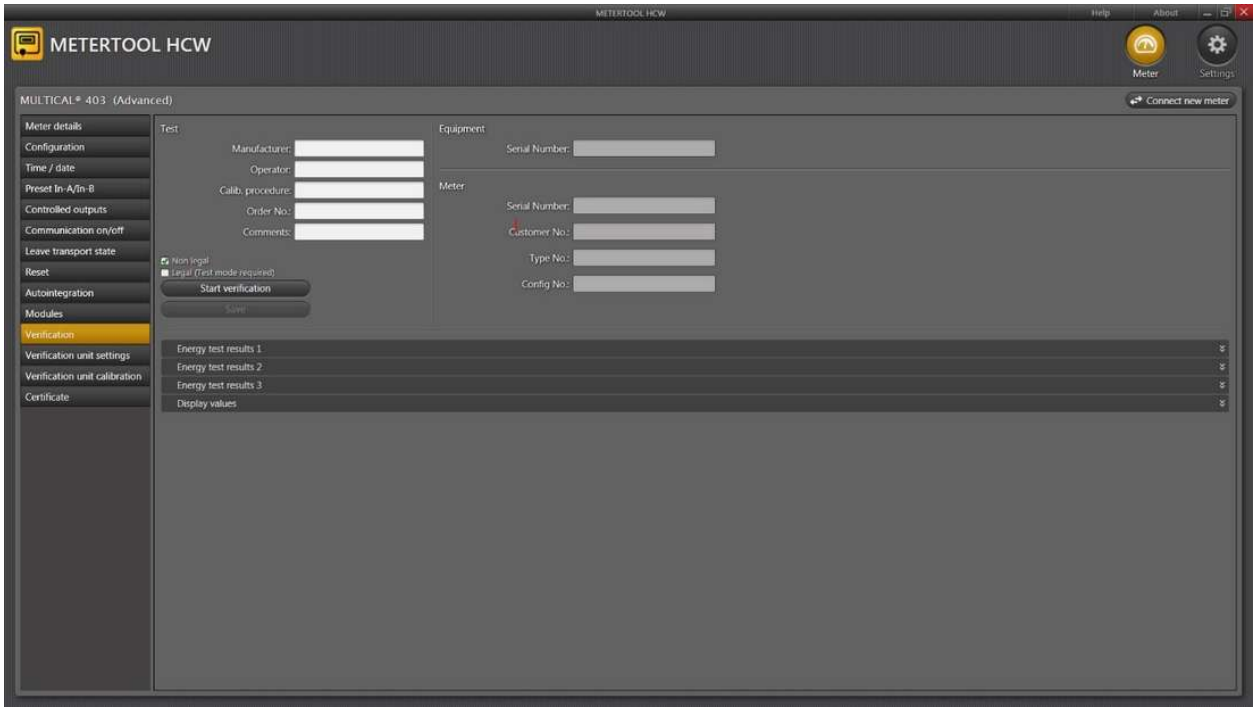

Click on ”Start calibration” in order to start test/calibration.

When the test has been completed, the result is displayed. Click on ”Save” in order to save the result in the database under the calculator’s serial number. You can save several results under one serial number without overwriting earlier results.

14.5 Printing of certificate

If you want to print a certificate with saved results, select “Certificate” in the menu. The result of test/calibration can be found under the serial number, and a certificate can be printed.

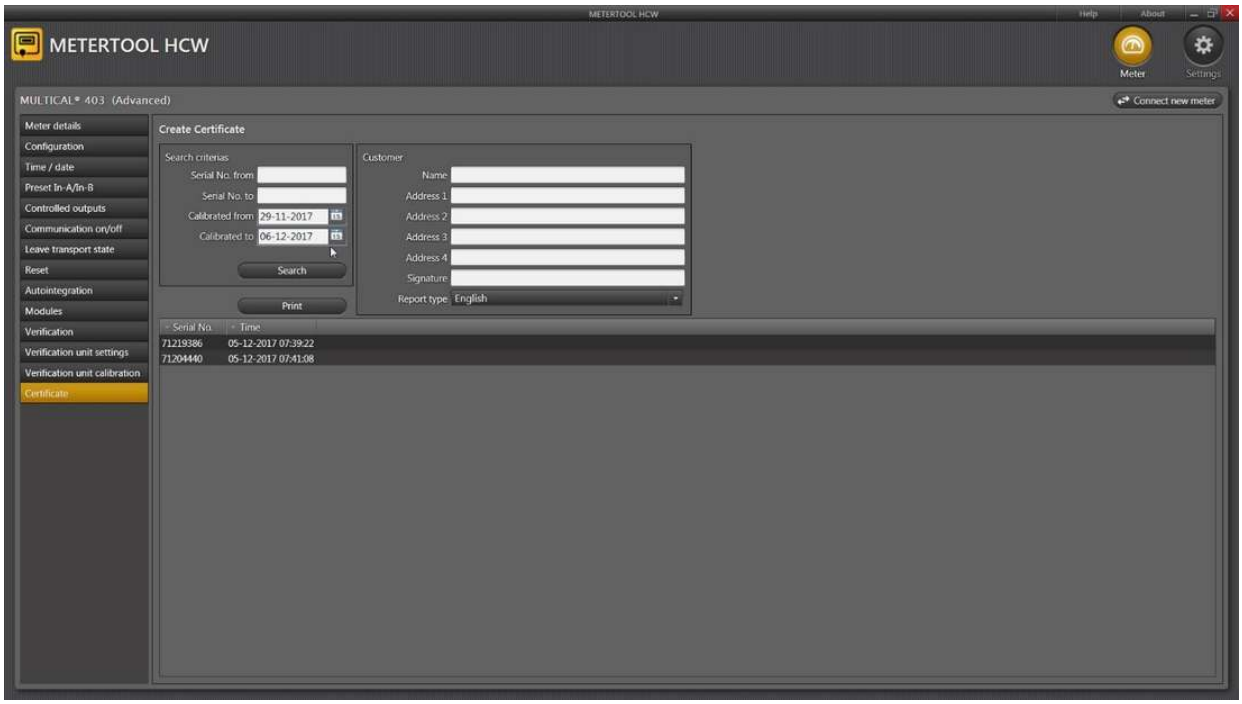

14.6 LogView HCW

Introduction and installation

On Kamstrup's website, you can find a registration form which must be completed before LogView HCW is handed over.

A common installation guide (5810-1211) for METERTOOL HCW and LogView HCW (license-free log reading program) is also available on the website. Read the installation guide before you start to download and install LogView HCW to ensure a correct installation.

General information

"LogView HCW" (item no. 6699-725) is used for reading of logged data from MULTICAL® 403 integrator and modules as well as for configuration, info and interval logging. The read data can be used for analysis and diagnostic test of the heating/cooling installation. Data can be presented in tabular or graphical form. Tables can be exported direct to "Microsoft Office Excel".

Available logged data appear from paragraph "**7.9 Info and config logger**".

"Log"

Select the required data function:

Interval Log enables interval readout of current counts from MULTICAL® 403 at optional intervals from 1 to 1440 minutes as well as an optional number of repetitions of the reading from 1 to 9999 times.

For reading of 'current' values, enter interval 1 and repetitions 1. One instantaneous reading is thereby achieved.

Minute log, Hour log, Daily log, Monthly log and Yearly log enable reading of logged data from MULTICAL® 403 at optional data period and values.

For further information on the programmable data logger see paragraph "**3.2.10 Data logger profile >RR<**"

Info log makes it possible to read out the latest 50 info events from MULTICAL® 403, the readout includes date and info code of the info event.

Configuration log All changes of configuration are logged here.

See paragraph "**7.9.2 Config logger**" for further details.

SW Success Log indicates how many times the meter's firmware has been successfully updated.

SW Attempt Log discloses number of attempts to update the meter's firmware.

Help button

Contact The contact key provides links to Kamstrup's website and mailbox.

Output This button displays the last used functions of the program.

User manual Link to the meter's user manual on Kamstrup's website

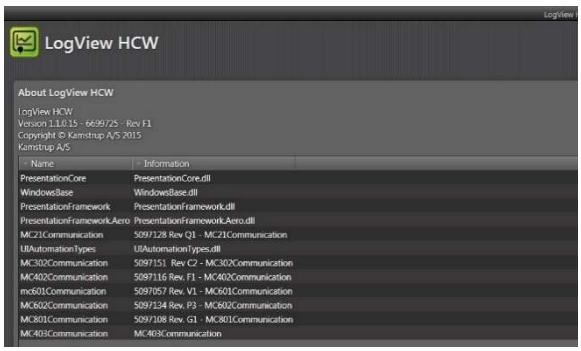

About button

List of LogView's program version and revision numbers as well as all sub-programs of the entire LogView HCW program, including type numbers and revision numbers.

14.6.1 Application

Double click on link or icon for "LogView HCW" in order to start the program and select the required data function.

Meter identification! Click on "Connect".

"**Daily log**" is used as an example:

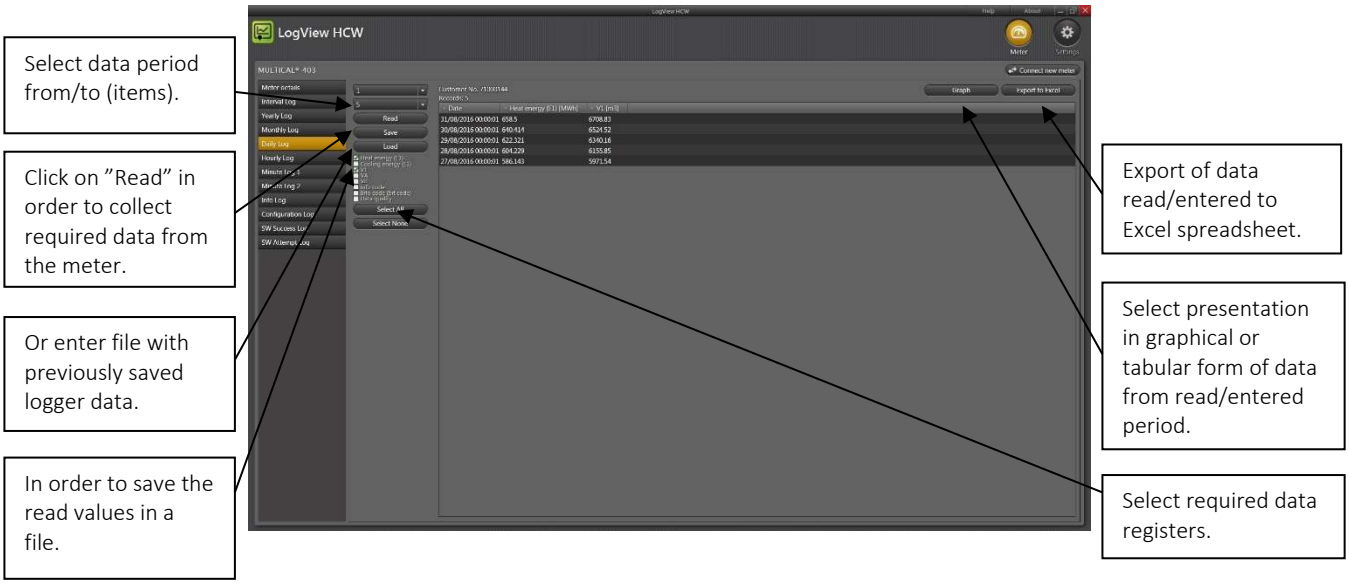

Select required registers by clicking the box beside the register name. In order to read all data, select all values by clicking "Select all".

When the reading is complete, you can save the values by clicking "Save". We recommend that you save the readings to make sure that the data can be reopened later for further analysis or for documentation purposes.

The values are shown in graphical or tabular form by activating "Graph/Table" (toggle function).

Select a new period and new data registers in order to start a new data reading. If the previously read data values have not been saved earlier, you will be asked if you want to save them.

Tables can be exported direct to ”Microsoft Office Excel" or printed.

In order to zoom in; activate □ Zoom and select the area, on which you want to zoom in. To zoom out; double-click anywhere in the system of coordinates.

In order to read current values from the graphs; remove the marking from □ Zoom and let the mouse cursor hover above the required point.

15 Approvals

15.1 Type approvals

MULTICAL® 403 is type approved according to MID on the basis of EN1434-4.

MULTICAL® 403 has a national Danish cooling approval, TS 27.02 009, according to BEK 1178 based on EN1434.

15.2 The Measuring Instruments Directive

MULTICAL® 403 is available with CE-marking according to MID (2014/32/EU). The certificates have the following numbers:

B-Module: DK-0200-MI004-037

D-Module: DK-0200-MID-D-001

16 Troubleshooting

MULTICAL® 403 has been constructed with a view to quick and simple installation as well as long and reliable operation at the heat consumer.

Should you, however, experience an operating problem, the table below can be used for troubleshooting.

Should it be necessary to repair the meter, we recommend only to replace battery, temperature sensors and communication modules. Alternatively, the whole meter should be replaced.

Major repairs must be made by Kamstrup A/S.

Before sending us a meter to be repaired or checked, please use the error detection table below to help you clarify the possible cause of the problem.

Symptom	Possible reason	Proposal for correction
No display function (empty display)	Power supply missing	Change battery or check mains supply. Does the supply plug provide 3.6 VDC?
No energy accumulation (e.g. MWh) and volume (m^3)	Read “INFO” in the display	Check the error indicated by the info code (See paragraph 7.7)
	If “INFO” = 00000000	Check that the flow direction matches the arrow on the flow sensor
	If “INFO” = xXxxxxxx, xxXxxxxx or xXXxxxxx.	Consult the ”INFO” overview (paragraph 7.7) and check the temperature sensors. If defective, replace the sensor set.
Accumulation of volume (m^3) but not of energy (e.g. MWh)	Inlet and outlet sensors have been interchanged in either installation or connection	Mount the sensors correctly
	Heat/cooling cut-off θ_{hc} has been configured at too low value	Reconfigure θ_{hc} at a suitable value, or configure θ_{hc} at 250 °C, thereby disconnecting the cut-off function.
Incorrect temperature reading	Defective temperature sensor Insufficient installation	Replace sensor set Check the installation
Temperature indication a little too low, or accumulation of energy (e.g. MWh) slightly too low	Bad thermic sensor contact Heat dissipation Too short sensor pockets	Make sure that the sensors are pushed to the bottom of the sensor pockets Insulate sensor pockets Replace by longer pockets

17 Disposal

Kamstrup A/S holds an environmental certification according to ISO 14001, and as part of our environment policy we use materials which can be recovered environmentally correctly to the greatest possible extent.

As from August 2005 Kamstrup's heat meters are marked according to EU Directive 2012/19/EU and the standard EN 50419.

The purpose of the marking is to inform our customers that the heat meter cannot be disposed of as ordinary waste.

- Disposal

Kamstrup A/S accept end-of-life MULTICAL® 403 for environmentally correct disposal according to previous agreement. The disposal arrangement is free of charge to the customer, except for the cost of transportation to Kamstrup A/S or the nearest disposal system.

The meters should be disassembled as described below and the separate parts handed in for approved destruction. The batteries must not be exposed to mechanical impact and the lead-in wires must not be short-circuited during transport.

Item	Material	Recommended disposal
2 x A Lithium cells	Lithium and thionyl chloride, approx. 2 x 0,9 g lithium	Approved deposit of lithium cells
D-cell Lithium battery	Lithium and thionyl chloride, >UN 3090<: approx. 4,5 g lithium	Approved deposit of lithium cells
PCBs in MULTICAL® 403 (LC-display to be removed)	Coppered epoxy laminate, components soldered on	PCB scrap for metal recovery
LC-display	Glass and liquid crystals	Approved processing of LC-displays
Cables for flow sensor and temperature sensors	Copper with silicone mantle	Cable recovery
Top cover	PC + 10% GF	Plastic recycling or combustion
PCB case and connecting base	PC + 10% GF with TPE gaskets	Plastic recycling or combustion
Wall bracket	PC + 20% glass	Plastic recycling or combustion
Meter case Clamp plate Transducer/reflector	> 84% brass or stainless steel Material No. 1,408 <15% common steel (St 37) <1% stainless steel	Metal recovery
Packing	Environmental cardboard	Cardboard recycling (Resy)
Packing	Polystyrene	EPS recovery

Please send any questions you may have regarding environmental matters to:

Kamstrup A/S
Att.: Quality and Sustainability
Fax: +45 89 93 10 01
info@kamstrup.com

18 Documents

	Danish	English	German
Technical description	FILE100000165	FILE100000166	FILE100000168
Data sheet	FILE100003586	FILE100003587	FILE100004061
Installation and user's guide	5512-2113	5512-2113	5512-2113

These documents are currently updated. Find the latest edition at

https://www.kamstrup.com/en-en/heat-solutions/meters-devices/meters/multical-403/documents