kamstrup

Data sheet

MULTICAL® 303 and MULTICAL® 403

- Fully programmable data logger with minute logger
- Configurable M-Bus communication with logger reading
- On-site configuration via front keys
- PN16/PN25 metal flow sensor – approved for up to 130 °C
- Battery lifetime of up to 16 years
- IP68 flow sensor
- 7- or 8-digit display resolution

MID 2014/32/EU

CE M24 0200

EN 1434

DK-BEK 1178 – 06.11.2014

DK 268 24

EN 1434

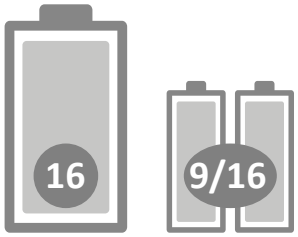

Contents

Description	3
Mechanical design MULTICAL® 303	4
Mechanical design MULTICAL® 403	5
Mechanical data	6
Approved meter data	7
Accuracy	8
Pressure loss	9
Dimensioned sketches MULTICAL® 303	10
Dimensioned sketches MULTICAL® 403	12
Electrical data	14
Product variants MULTICAL® 303	17
Meter configuration MULTICAL® 303	18
Product variants MULTICAL® 403	19
Meter configuration MULTICAL® 403	21
Information codes in display	22
Accessories	23

Description

MULTICAL® 303 is the compact all-round heat and cooling meter that can be installed everywhere due to its minimum dimensions. The meter can be turned during installation, even in the most compact systems, enabling you to always obtain optimal reading of the display.

The robust metal flow sensor tolerates continuous temperatures of up to 130 °C, is effectively protected against condensation and can be used in both PN16 and PN25 installations.

The flow sensor is constructed with Kamstrup's unique ultrasonic technique that ensures an extremely long lifetime – also in magnetite-containing heating systems.

MULTICAL® 303 consists of a flow sensor based on ultrasound, an electronic display unit and a Pt500 sensor set. These components are separately calibrated and then assembled to one heat, cooling or combined heat/cooling meter. If the components are separated, a reverification of the meter is required.

The meter has a built-in, programmable data logger that stores all relevant registers. Standard data logger registers are stored for 20 years, 36 months, 460 days and 72 hours.

During installation, the meter can be configured for installation of the flow sensor in either inlet or outlet pipe. Furthermore, the energy unit and resolution as well as date/time and M-Bus address can be adjusted merely by pressing a button – no special tools needed.

MULTICAL® 403 is a static heat meter, cooling meter or combined heat/cooling meter based on the ultrasonic principle. The meter is intended for energy measurement in almost all types of thermal installations where water is used as the energy-conveying medium.

MULTICAL® 403 consists of a calculator, a flow sensor and two temperature sensors. MULTICAL® 403 has been developed for measurement of energy consumption in flats, single-family and multi-family houses, housing associations, blocks of flats and small industry. The meter is simple to install, and it has a temperature range of 2 ...180 °C and a meter programme with nominal flow from q_p 0.6 m^3/h to 15 m^3/h.

The meter can be powered by mains or battery supply as required. You can choose between a small battery without transport restrictions or a more powerful battery with 16 years' lifetime. No matter which solution you choose, the power consumption of MULTICAL® 403 is low.

A wide range of parameters are configurable via the front keys of MULTICAL® 403: Flow sensor position in inlet or outlet, energy unit, primary M-Bus address, radio on/off, target dates, etc. Configuration can be carried out on site, thus contributing to a reduction of stocks and installation time.

Mechanical design of MULTICAL® 303

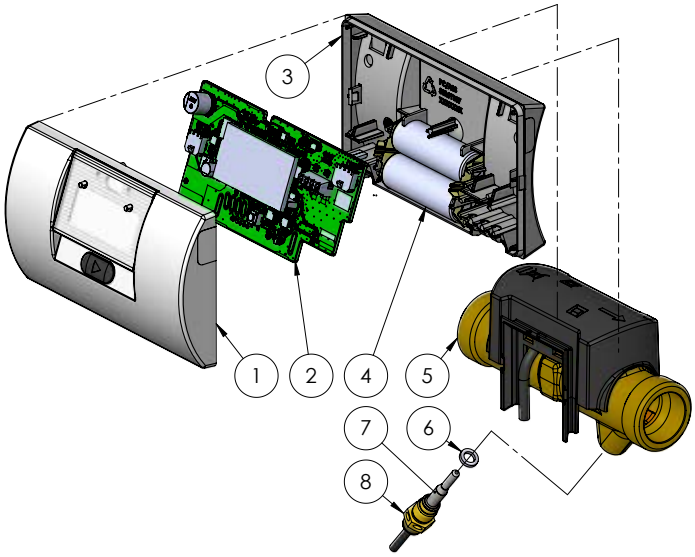

1 Top cover with front key and laser engraving
2 PCB with microcontroller, flow-ASIC, display, etc.
3 Base cover (may only be opened by an authorised laboratory)
4 One or two A-cell batteries
5 Flow sensor cover (may only be opened by an authorised laboratory)
6 O-ring, temperature sensor
7 Union, temperature sensor
8 Temperature sensor (ø5.0 – ø5.2 – DS 27.5)

Mechanical design of MULTICAL® 403

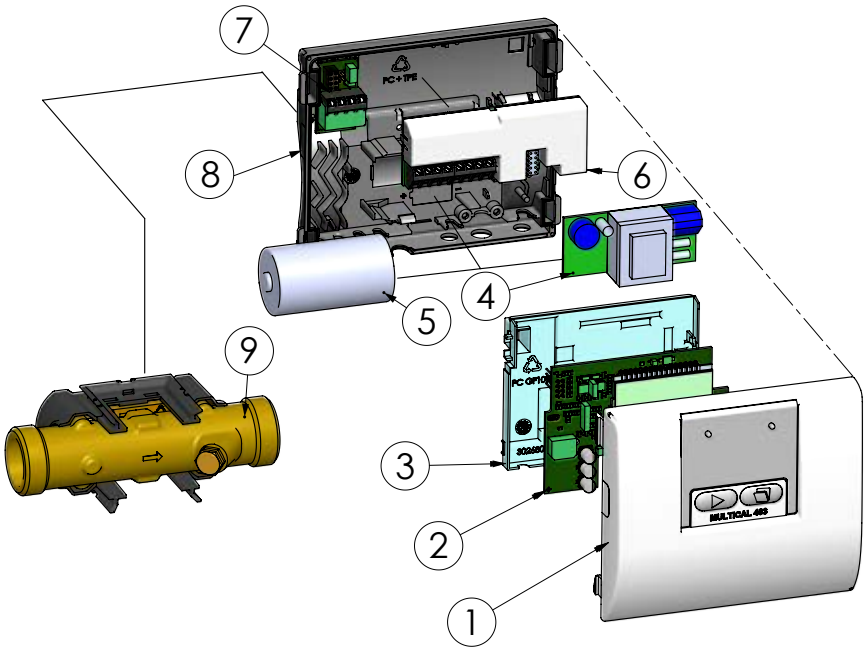

1 Top cover with front keys and laser engraving
2 PCB with microcontroller, flow-ASIC, display, etc.
3 PCB cover (may only be opened by an authorised laboratory)
4 Either a power supply module can be mounted
5 Or a battery can be mounted
6 Data module, e.g. M-Bus
7 Connection of temperature sensors
8 Bottom cover
9 Flow sensor (IP68)

Mechanical data

	MULTICAL® 303	MULTICAL® 403
Weight (depending on the flow sensor size)	0.7 kg – 0.8 kg	0.9 – 8.6 kg
Ambient temperature	5...55 °C. Non-condensing, closed location (indoor installation)	
Protection class		
Calculator	IP65	IP54
Flow sensor	IP68	IP68
Media temperatures	At media temperatures below the ambient temperature or above 90 °C, wall-mounting of the calculator is recommended.	
Heat meters	303-W: 2...130 °C	403-W: 2...130 °C
Cooling meters	303-C: 2...50 °C	403-C: 2...50 °C
Heat/cooling meters	303-T: 2...130 °C	403-T: 2...130 °C
Medium in flow sensor	Water (district heating water as described in CEN TR 16911 and AGFW FW510)	
Storage temperature	-25...60 °C (drained flow sensor)	
Pressure stage	PN16/PN25, PS25	
Flow sensor cable	1.5 m (the cable is non-detachable)	
Temperature sensor cables	1.5 m or 3 m	1.5 m, 3 m or 10 m
Connection cables		ø3.5...6 mm
Supply cables		ø5...8 mm

Materials

	MULTICAL® 303	MULTICAL® 403
Wetted parts		
Case, coupling	Hot forged, dezincification-resistant brass (CW 602N)	
Case, flange		Stainless steel, W.nr. 1.4308
Transducer	Stainless steel, W.nr. 1.4404	
O-rings	EPDM	
Measuring tube	Thermoplastic, PES 30 % GF	
Reflektors	Thermoplastic, PES 30 % GF and stainless steel, W.nr. 1.4306	
Flow sensor casing		
Flow sensor cover	Thermoplastic, PC 20 % GF	
Wall bracket	Thermoplastic, PC 20 % GF	
Calculator casing		
Top	Thermoplastic, PC 10 % GF with TPE (thermoplastic elastomer)	
Base	Thermoplastic, PC/ABS	
Internal cover		Thermoplastic, PC 10 % GF
Cables	Silicone cable with inner Teflon insulation	

Approved meter data

	MULTICAL® 303	MULTICAL® 403
Approvals		
Heat meter	DK-0200-MI004-045	DK-0200-MI004-037
– Temperature range	θ: 2 °C...180 °C	
– Differential range	ΔΘ: 3 K...178 K	
Cooling meter	TS 27.02 015	TS 27.02 009
– Temperature range	θ: 2 °C...180 °C	
– Differential range	ΔΘ: 3 K...178 K	
Bifunctional heat/cooling meter	DK-0200-MI004-045 and TS 27.02 015	DK-0200-MI004-037 and TS 27.02 009
– Temperature range	θ: 2 °C...180 °C	
– Differential range	ΔΘ: 3 K...178 K	
	The stated minimum temperatures only relate to the type approval. The meter has no cut-off for low temperature and thus measures down to 0.01 °C and 0.01 K.	
Standards and norms	EN 1434:2007/AC:2007 EN 1434:2015+A1:2018 EN 1434:2022 BEK1178	
EU directives	Measuring Instruments Directive Low Voltage Directive Electromagnetic Compatibility Directive Radio Equipment Directive RoHS Directive Pressurised equipment Directive	
EN 1434 designation	Environmental class A	Environmental class A and C
MID designation		
Mechanical environment	Class M1 and M2	
Electromagnetic environment	Class E1	Class E1 and E2
	5...55 °C. Non-condensing, closed location (indoor installation)	
Temperature sensor	Pt500 – EN 60751	

Accuracy

Meter components	MPE according to EN 1434-1	MULTICAL® 303 and MULTICAL® 403, typical accuracy
Calculator	E_c= ± (0.5 + ΔΘ min/ΔΘ) %	E_c= ± (0.15 + 2/ΔΘ) %
Flow sensor	E_f = ± (2 + 0.02 q_p/q), but not over ±5 %	E_f= ± (1 + 0.01 q_p/q) %
Sensor set	E_t= ± (0.5 + 3 ΔΘ min/ΔΘ) %	E_t= ± (0.4 + 4/ΔΘ) %

Total typical accuracy of MULTICAL® 303 and MULTICAL® 403 compared to EN 1434-1.

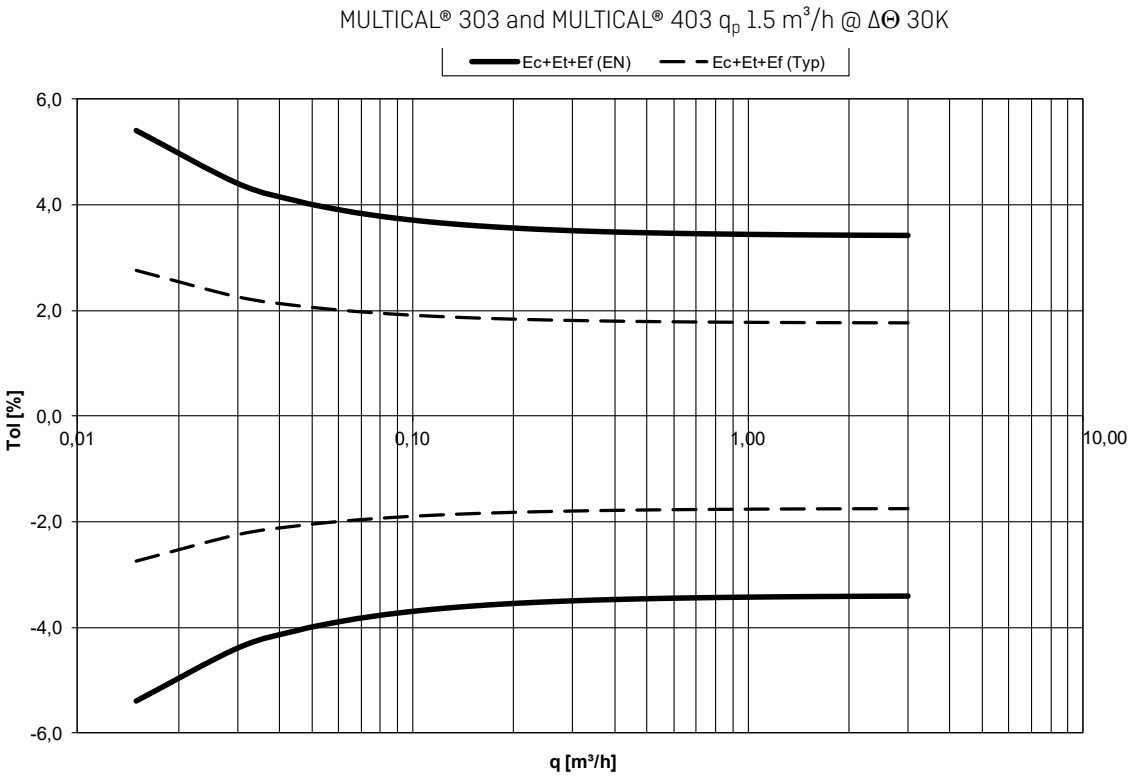

Pressure loss

The pressure loss in a flow sensor is stated as the maximum pressure loss at qp.
According to EN 1434, the maximum pressure loss must not exceed 0.25 bar.

Graph	Nom. flow q_p [m³/h]	Max flow q_s [m³/h]	Min. flow q_i * [l/h]	Min. flow cut-off [l/h]	Saturation flow [m³/h]	Nom. diameter [mm]	$\Delta p@q_p$ [bar]	k_v	q@ 0.25 bar [m³/h]	MULTICAL® 303	MULTICAL® 403
A	0.6	1.2	6	3	1.5	DN15/DN20	0.03	3.46	1.7	x	x
B	1.5	3.0	15	3	4.6	DN15/DN20	0.09	4.89	2.4	x	x
C	2.5	5.0	25	5	7.6	DN20	0.09	8.15	4.1	x	x
D	3.5	7.0	35	7	9.2	DN25	0.07	13.42	6.8		x
E	6	12	60	12	18	DN25	0.06	24.5	12.3		x
F	10	20	100	20	30	DN40	0.06	40.83	20.4		x
F	15	30	150	30	46	DN50	0.14	40.09	20.1		x

* Dynamic area q_p:q_i = 100:1

Δp MULTICAL® 303 and MULTICAL® 403

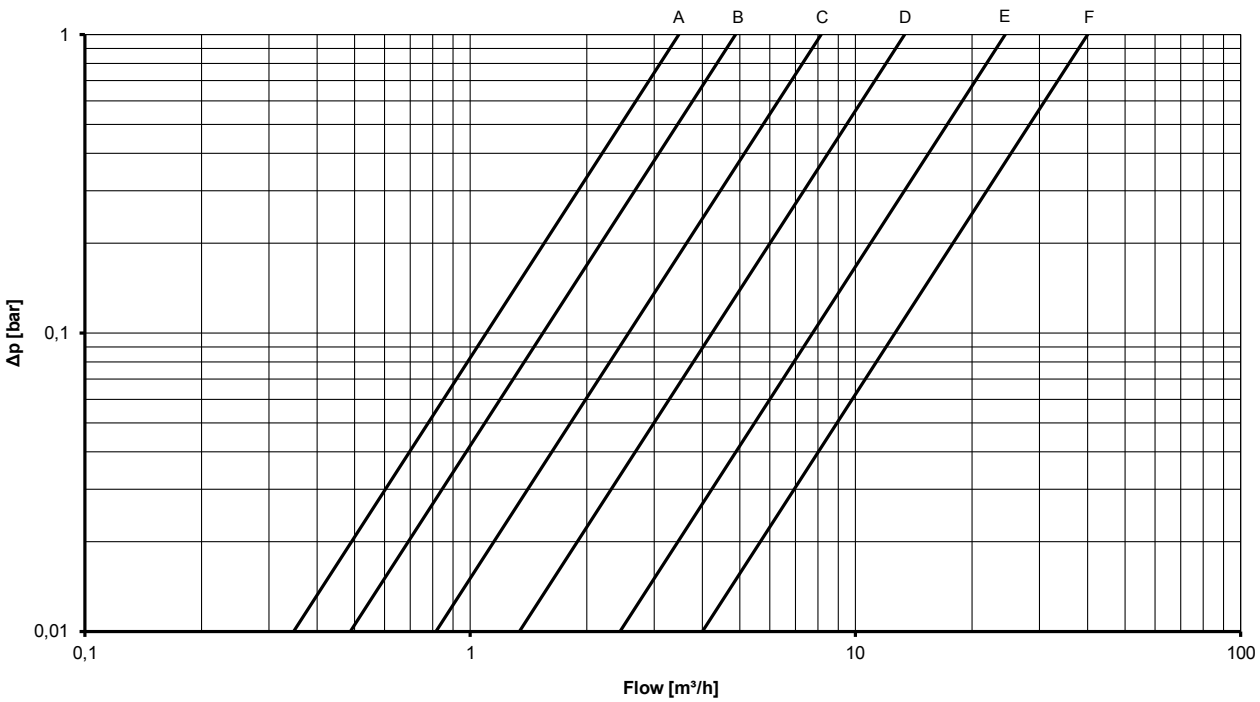

Dimensioned sketches of MULTICAL® 303

All measurements in [mm]

Calculator

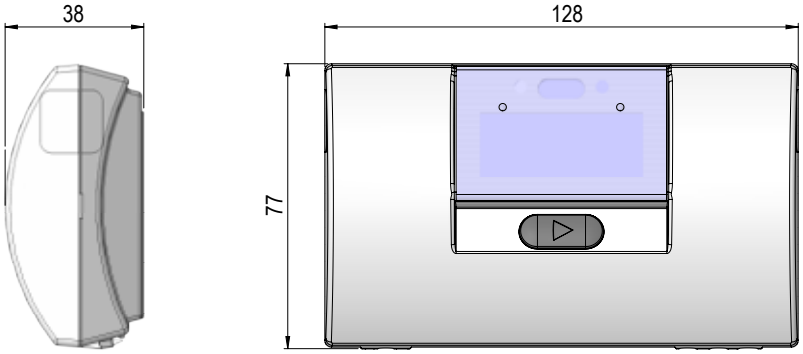

Complete MULTICAL® 303 with calculator mounted on flow sensor

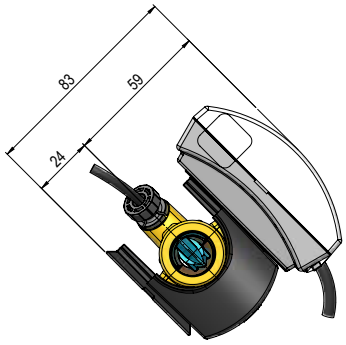

Calculator mounted with wall bracket

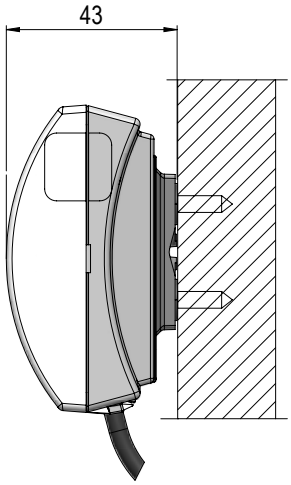

Wall bracket for calculator

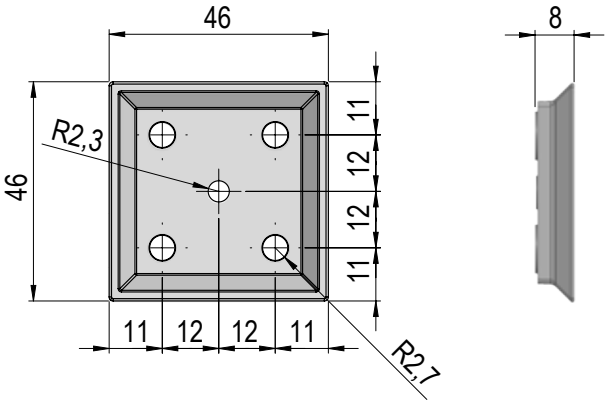

Dimensioned sketches of MULTICAL® 303

Direct short temperature sensor

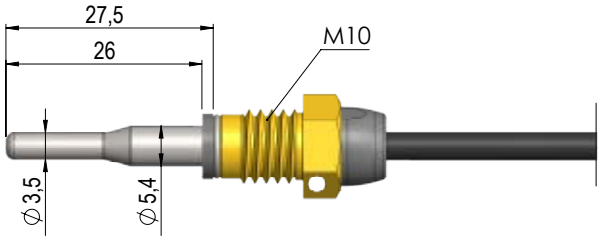

Pocket temperature sensor with composite union

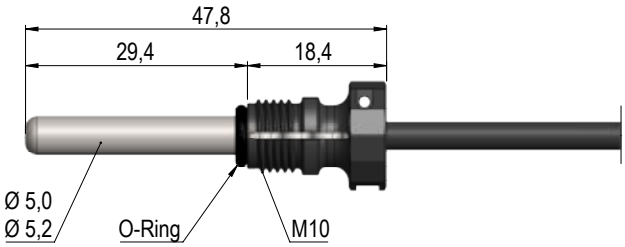

Flow sensor

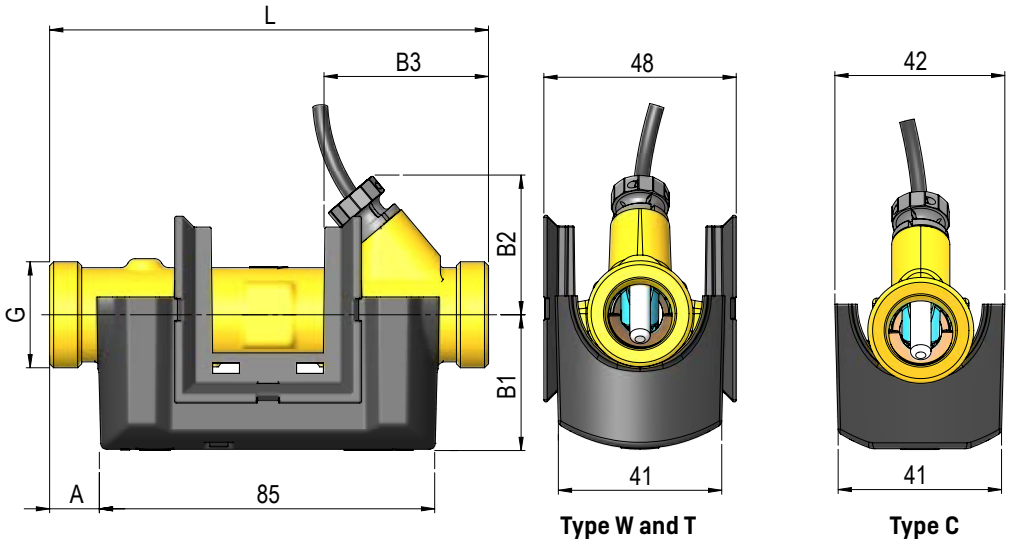

Thread	L [mm]	A [mm]	B1 [mm]	B2 [mm]	B3 [mm]	Approx. weight [kg] *
G¾B (R½)	110	12	35	35	40	0.7
G1B (R¾)	130	22	38	38	50	0.8

* The weight indication includes the complete meter including flow sensor, calculator, sensor set and 2 x A-batteries.
Any provided accessories such as couplings, nippels and sensor pockets as well as packaging are not included in the weight indication.

Dimensioned sketches of MULTICAL® 403

All measurements in [mm]

Calculator

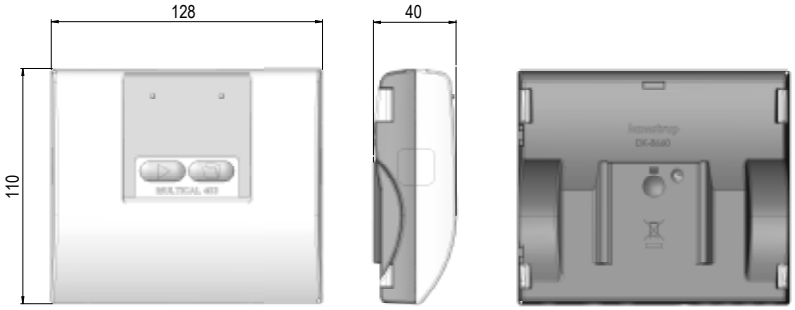

Wall bracket for calculator

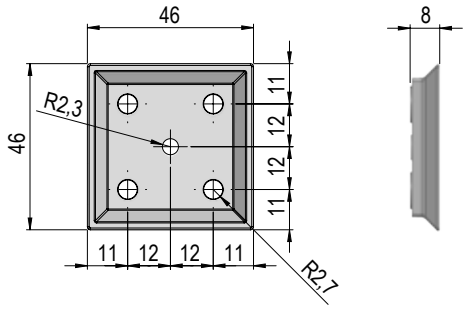

Flow sensor with G¾ and G1 thread connection

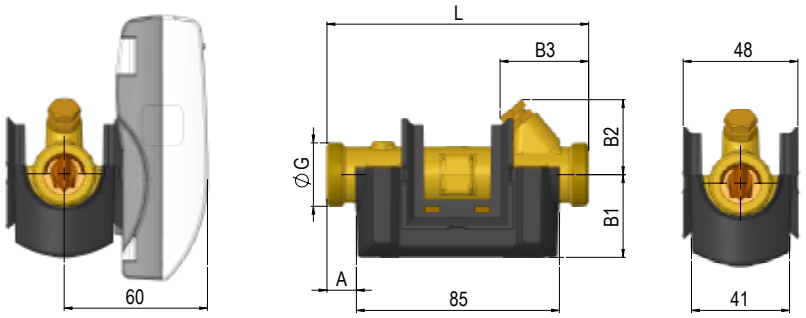

Nominal flow q_p [m³/h]	Thread G	L	A	B1	B2	B3	Approx. weight [kg] *
0.6 + 1.5	G¾B	110	12	35	32	38	0.9
1.5	G¾B	165	12	35	32	65	1.0
1.5	G1B	130	22	38	32	48	1.0
2.5	G1B	130	22	38	38	48	1.0
0.6 + 1.5	G1B	190	22	38	38	78	1.1
2.5	G1B	190	22	38	38	78	1.2

* Weight of calculator, flow sensor, 3 m sensor pair excl. packaging

Dimensioned sketches of MULTICAL® 403

All measurements in [mm]

Flow sensor with G5/4 and G2 threaded connection

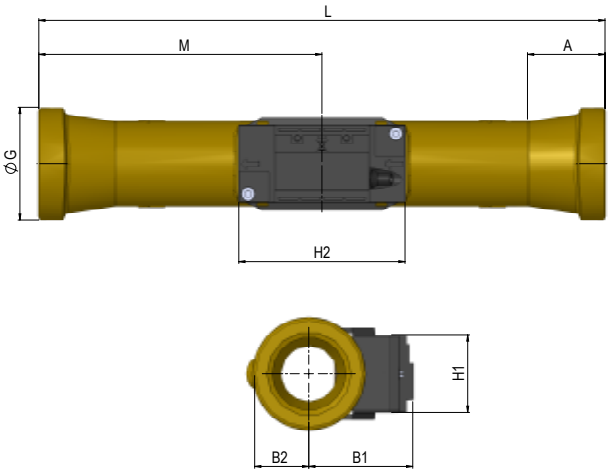

Nominal flow q_p [m³/h]	Thread G	L	M	H2	A	B1	B2	H1	Approx. weight [kg] *
3.5	G5/4B	260	130	88	16	51	20	41	2.0
6	G5/4B	260	130	88	16	53	20	41	2.1
10	G2B	300	150	88	40.2	55	29	41	3.0

* Weight of calculator, flow sensor, 3 m sensor pair excl. packaging

Flow sensor with DN25, DN40 and DN50 flange connection

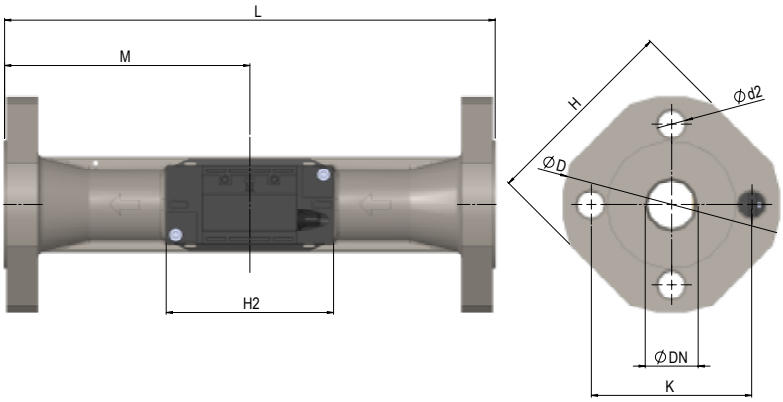

Nominal flow q_p [m³/h]	Nom. diameter DN	L	M	H2	D	H	K	Bolts			Approx. weight [kg] *
								Qty	Thread	d2	
6	DN25	260	130	88	115	106	85	4	M12	14	4.6
10	DN40	300	150	88	150	140	110	4	M16	18	7.5
15	DN50	270	155	88	165	145	125	4	M16	18	8.6

* Weight of calculator, flow sensor, 3 m sensor pair excl. packaging

Electrical data

	MULTICAL® 303		MULTICAL® 403	
Calculator data				
Display	LCD – 7 or 8 digits with a digit height of 6.8 mm		LCD – 7 or 8 digits with a digit height of 8.2 mm	
Resolutions	9999,999 – 99999,99 – 999999,9 – 9999999 99999,999 – 999999,99 – 9999999,9 – 99999999			
Energy units	MWh – kWh – GJ			
Data logger (EEPROM)				
Logger contents	Programmable - all registers can be selected			
Logging interval	Programmable - from 1 minute to 1 year			
Logging depth	Programmable - standard: 20 years, 36 months, 460 days, 72 hours			
Info logger (EEPROM)	50 info codes (50 latest are shown in the display)			
Clock/calendar (with backup battery)	Clock, calendar, leap year compensation, target date			
Daylight saving time/wintertime (DST)	Programmable The function can be disabled so that "technical normal time" is used			
Clock accuracy	Without external adjustments: Less than 15 minutes/year With external adjustment every 48 hours: Less than 7 s from legal time			
Data communication	KMP protocol with CRC16 is used for optical communication –			
			and for modules in MULTICAL® 403	
Power in temperature sensors	< 10 µ W RMS			
Supply voltage	3.6 VDC ± 0.1 VDC			
Battery				
Type	3.65 VDC 1 x A-cell	3.65 VDC 2 x A-cell	3.65 VDC 1 x D-cell	3.65 VDC 2 x A-cell
Life The battery lifetime is affected by the meter's communication and setup parameters as well as transmission interval, transmission power and datagram contents.	Up to 8 years @ t_{BAT} < 30 °C	Up to 16 years @ t_{BAT} < 30 °C		Up to 9 years @ t_{BAT} < 30 °C
Lithium contents	Approx. 0.9 g	2 x approx. 0.9 g	Approx. 4.9 g	2 x approx. 0.9 g

Electrical data

Battery	**MULTICAL® 403**
Backup battery (for real-time clock)	3.0 VDC, BR-cell lithium
Battery lifetime expected for a meter fitted with an NB-IoT module	Up to 12 years (daily transmission) depending on the installation site and the NB-IoT coverage level called "CE level"
Mains supply	230 VAC +15/-30 %, 50/60 Hz 24 VAC ±50 %, 50/60 Hz 24 VDC +75/-25 % (24 VDC only for High Power SMPS)
Insulation voltage	3.75 kV
Power consumption	< 1 W
Backup supply	Integral SuperCap eliminates interruptions due to short-term power failures (only supply module types 7 and 8)

Electrical data

Temperature measurement MULTICAL® 303 and MULTICAL® 403	t1 Inlet temperature	t2 Outlet temperature	ΔΘ (t1-t2) Heat measurement	ΔΘ (t2-t1) Cooling measurement	t5 Preset for A1 and A2 (only MULTICAL® 403)
Measuring range 2-wire, Pt500 (303-W/C/T) 2-wire, Pt500 (403-W/C/T)	0.01...185.00 °C				
Offset adjustment	± 0.99 K				

Max cable lengths Max ø6 mm cable. Cable only replaceable on MULTICAL® 403	Pt500, 2-wire
	2 x 0.25 mm²: 10 m

Electrical data for MULTICAL® 403

Pulse inputs In-A/In-B	Electronical contact	Reed contact
Pulse input	680 kΩ pull-up for 3.6 V	680 kΩ pull-up for 3.6 V
Pulse ON	< 0.4 V for > 30 ms	< 0.4 V for > 500 ms
Pulse OFF	> 2.5 V for > 30 ms	> 2.5 V for > 500 ms
Pulse frequency	< 3 Hz	< 1 Hz
Electrical isolation	No	No
Max cable length	25 m	25 m
Requirements for external contact	Leakage current at function open < 1 µA	

Pulse outputs Out-C/Out-D	
Pulse output type	Opto FET
External voltage	1...48 VDC/VAC
Current	< 50 mA
Residual stress	R_{ON} ≤ 40 Ω
Electrical isolation	2 kV
Max cable length	25 m

Product variants MULTICAL® 303

		Static data Written on the front of the meter 303-x-xx-x-xx				-	Dynamic data Shown in the display xx-x-xx		
MULTICAL® 303 type number	**Type 303**	☐	☐☐	☐	☐☐	-	☐☐	☐	☐☐

Sensor connection	
Pt500 Heat meter	W
Pt500 Heat/cooling meter	T
Pt500 Cooling meter	C

Flow sensor [1]

q_p [m³/h]	Connection	Length [mm]	Dynamic range	
0.6	G¾B (R½)	110	100:1	10
1.5	G¾B (R½)	110	100:1	40
1.5	G1B (R¾)	130	100:1	70
2.5	G1B (R¾)	130	100:1	A0

Meter type		
Heat meter (MID module B+D)		2
Heat/cooling meter (MID module B+D & TS27.02+DK268) [2]	θ_{hc}= OFF	3
Heat meter, National approvals		4
Cooling meter (TS27.02+DK268)		5
Heat/cooling meter (MID module B+D & TS27.02+DK268) [2]	θ_{hc}= ON	6

Country code	
Determined by Kamstrup upon receipt of order	XX

Temperature sensor set (Pt500)

	Length (mm)	Diameter ø [mm]	Cable length (m)	
Direct short temperature sensors	27.5	-	1.5	51
Direct short temperature sensors	27.5	-	3.0	52
ø5.0 with composite unions	-	5.0	1.5	61
ø5.0 with composite unions	-	5.0	3.0	62
ø5.2 with composite unions	-	5.2	1.5	71
ø5.2 with composite unions	-	5.2	3.0	72

Supply [3]		
Battery, 1 x A-cell	Battery lifetime of up to 8 years	1
Battery, 2 x A-cells	Battery lifetime of up to 16 years	9

Communication	
M-Bus, configurable	20
Wireless M-Bus, configurable 868.95 MHz EU	30

1. The flow sensors are type-approved for the dynamic ranges qp:qi = 250:1 and 100:1, but are as standard delivered as 100:1.
   Please contact Kamstrup A/S for further information.
2. In some countries, bi-functional meters type 3 and 6 are only allowed to be assigned with the MID marking due to national law.
3. The battery lifetime is affected by the meter's communication and setup parameters as well as transmission interval, transmission power and datagram contents.
   Please contact Kamstrup A/S for calculations of specific configurations.

Meter configuration MULTICAL® 303

	A	- B	- CCC	- DDD	- L	- RR	- T	- VVVV	- XXX	- YY	- ZZZ
Flow sensor position											
Inlet	3										
Outlet	4										
Measuring unit											
GJ		2									
kWh		3									
MWh		4									
Flow sensor coding											
Normal/high resolution (7 digits)			4xx								
High resolution (8 digits)			5xx								
Display											
Heat meter				210							
Heat/cooling meter				310							
Cooling meter				510							
Integration mode											
Adaptive mode (4-64 s)					5						
Normal mode (32 s)					6						
Fast mode (4 s)					7						
Data logger profile											
Standard data logger profile						30					
Encryption level											
Individual key							3				
Customer label											
Serial number								xxxx			
Communicaion configuration											
Communication hardware											
M-Bus (selection in type number)									x20		
Wireless M-Bus (selection in type number)									x30		
System configuration (wM-Bus)											
See the technical description - 5512-2701										YY	
Datagram (M-Bus/wM-Bus)											
See the technical description - 5512-2701											ZZZ

Please contact Kamstrup A/S for further information on configuration options.

Product variants MULTICAL® 403

MULTICAL® 403 type number

	Static data Written on the front of the meter 403-X XX X XX –					Dynamic data Shown in the display XX X XX		
Type 403-	□	□□	□	□□	–	□□	□	□□

Sensor connection	
Pt500 heat meter	W
Pt500 cooling meter	C
Pt500 cooling meter and heat/cooling meter	T

Flow sensor q_p [m³/h]	**Connection**	**Length [mm]**	**Dynamic range**		
0.6	G¾B (R½)	110	100:1		10
0.6	G1B (R¾)	190	100:1		30
1.5	G¾B (R½)	110	100:1		40
1.5	G¾B (R½)	165	100:1		50
1.5	G1B (R¾)	110	100:1		60
1.5	G1B (R¾)	130	100:1		70
1.5	G1B (R¾)	165	100:1	(130 mm with extension)	80
1.5	G1B (R¾)	190	100:1		90
2.5	G1B (R¾)	130	100:1		A0
2.5	G1B (R¾)	190	100:1		B0
3.5	G5/4B (R1)	260	100:1		D0
6.0	G5/4B (R1)	260	100:1		F0
6.0	DN25	260	100:1		G0
10	G2B (R1½)	300	100:1		H0
10	DN40	300	100:1		J0
15	DN50	270	100:1		K0

Meter type	
Heat meter (MID module B)	1
Heat meter (MID modules B+D)	2
Heat/cooling meter (MID modules B+D & TS+DK268) *	3
Heat meter (national approvals)	4
Cooling meter (TS+DK268)	5
Heat/cooling meter (MID modules B+D & TS+DK268) *	6
Volume meter, hot	7
Volume meter, cold	8

Country code	
Determined by Kamstrup upon receipt of order	XX

* In some countries, bi-functional meters type 3 and 6 are only allowed to be assigned with the MID marking due to national law.

Note: The flow sensor is approved for the dynamic areas qp:qi 250:1 and 100:1, but is, by default, delivered as qp:qi 100:1.

Product variants MULTICAL® 403

MULTICAL® 403 type number		Static data Written on the front of the meter 403-X XX X XX –	Dynamic data Shown in the display XX X XX
Type 403-		□ □□ □ □□ –	□□ □ □□
Temperature sensor set			
Supplied without temperature sensors			00
2-wire Pt500 temperature sensors			
Direct short temperature sensors, 2 pcs.	DS 27.5 mm	1.5 m - 3 m	5x
Direct short temperature sensors, 2 pcs.	DS 38 mm	1.5 m - 3 m	2x
Direct short temperature sensors with composite union, 2 pcs.	ø5.0 mm	1.5 m - 3 m	6x
Direct short temperature sensors with composite union, 2 pcs.	ø5.2 mm	1.5 m - 3 m	7x
Pocket temperature sensors, 2 pcs.	PL ø5.8 mm	1.5 m - 5 m	8x
Pocket temperature sensors, 2 pcs.	PL ø6.0 mm	1.5 m - 5 m	9x

Supply	
No supply	0
Battery, 1 x D-cell	2
230 VAC High Power supply module	3
24 VAC/VDC High Power supply module	4
Battery, 1 x C-cell IoT	6
230 VAC supply	7
24 VAC supply	8
Battery, 2 x A-cells	9

Modules	
No module	00
Data Pulse, inputs (In-A, In-B)	10
Data Pulse, outputs (Out-C, Out-D)	11
Wired M-Bus, inputs (In-A, In-B)	20
Wired M-Bus, outputs (Out-C, Out-D)	21
Wired M-Bus, Thermal Disconnect *	22
linkIQ/wM-Bus, inputs (In-A, In-B), EU	32
linkIQ/wM-Bus, outputs (Out-C, Out-D), EU	33
wM-Bus, inputs (In-A, In-B), 912,5/915/918,5 MHz	34
Analog outputs 2 x 0/4...20 mA *	40
PQT Controller *	43
Low Power Radio, inputs (In-A, In-B), 434 MHz	50
Low Power Radio GDPR, inputs (In-A, In-B), 434 MHz	51
NB-IoT, inputs (In-A, In-B) **	56
BACnet MS/TP, inputs (In-A, In-B) *	66
Modbus RTU, inputs (In-A, In-B) *	67
BACnet IP, inputs (In-A, In-B) *	81
Modbus/KMP TCP/IP, inputs (In-A, In-B) *	82
READy TCP/IP, inputs (In-A,In-B)	83

* The meter must be mains-supplied..

** The meter must be supplied by either C-cell IoT battery or high power supply

Contact Kamstrup for further information about product variants.

Meter configuration MULTICAL® 403

	A	-	B	-	CCC	-	DDD	-	EE	-	FF	-	GG	-	L	-	N	-	PP	-	RR	-	T	-	VVVV
Flow sensor position																									
Inlet	3																								
Outlet	4																								
Measuring unit																									
GJ			2																						
kWh			3																						
MWh			4																						
Flow sensor coding																									
7-digit CCC-codes					4xx																				
8-digit CCC-codes					5xx																				
Display																									
Heat meter							210																		
Heat/cooling meter							310																		
Cooling meter							510																		
Tariffs																									
No active tariff									00																
Power tariff									11																
Flow tariff									12																
t1-t2 tariff									13																
Inlet tariff									14																
Outlet tariff									15																
Time-controlled tariff									19																
Heat/cooling volume tariff									20																
PQ tariff									21																
Pulse inputs A and B																									
10 l/imp, pre-counter 1 (<10 m³/h)											24		24												
Integration mode																									
Adaptive mode (4-64 s)															1										
Normal mode (32 s)															2										
Fast mode (4 s)															3										
Cold water leak detection (input A)																									
OFF																	0								
30 minutes without pulses																	1								
1 hour without pulses																	2								
2 hours without pulses																	3								
Pulse outputs Out-C/Out-D																									
Out-C: V1/4					5.0 ms														73						
Out-C: V1/1					3.9 ms														82						
Out-C: V1/4					22 ms														83						
E1 and V1 or E3 and V1					32 ms														95						
E1 and V1 or E3 and V1					100 ms (0.1 s)														96						
Controlled output based on data commands																			99						
Data logger profile																									
Standard data logger profile																					30				
Encryption level																									
Individual key																							3		
Customer label																									
Serial number																									0000

Contact Kamstrup A/S for further information about meter configuration.

Information codes in display

Display digit								Description
1	**2**	**3**	**4**	**5**	**6**	**7**	**8**	
Info	**t1**	**t2**	**0**	**V1**	**0**	**0**	**0**	
1								Supply voltage is missing
2								Low battery level
9 *								External alarm (e.g. via KMP)
	1							t1 above measuring range or disconnected
		1						t2 above measuring range or disconnected
	2							t1 below measuring range or short-circuited
		2						t2 below measuring range or short-circuited
	9	9						Invalid temperature difference (t1-t2)
				3				V1 Air
				4				V1 Wrong flow direction
				6				V1 > q_s for more than one hour
						8 *		Pulse input A Leakage in the system
						9 *		Pulse input A External alarm
							8 *	Pulse input B Leakage in the system
							9 *	Pulse input B External alarm

Example:								
1	0	2	0	0	0	9	0	

* Only MULTICAL® 403

Note: Info codes are configurable. It is thus not certain that all parameters are available in a given MULTICAL® 303 or MULTICAL® 403.

An info logger stores the info code each time the info code is changed. It is possible to read the latest 50 changes of the info code as well as the date of the change.

Accessories

Type number	Description	MULTICAL® 303	MULTICAL® 403
HC-993-09	Battery module with 2xA-cell		x
HC-993-02	Battery module with 1xD-cell		x
HC-993-06	Battery module with 1xC-cell IoT		x
HC-993-07	230 VAC supply module		x
HC-993-08	24 VAC supply module		x
HC-993-03	230 VAC High Power supply module		x
HC-993-04	24 VAC/VDC High Power supply module		x
2210-061	Gasket for flow sensor G¾B (R½) / coupling 6561-323	x	x
2210-062	Gasket for flow sensor G1B (R¾) / coupling 6561-324	x	x
2105-002	Sealing cap for flow sensor G¾B (R½), blue	x	x
3026-1148	Sealing cap for flow sensor G¾B (R½), self-locking, blue	x	x
3026-517	Sealing cap for direct short temperature sensor DS27,5, blue	x	x
3026-518	Sealing cap for direct short temperature sensor DS27,5, red	x	x
3026-1034	Sealing cap for ø5.0 mm / ø5.2 mm temperature sensor with composite union, black	x	x
3026-655.A	Wall bracket including rawlplugs and screws	x	x
3026-902	Bracket for mounting MULTICAL® 403 on wall bracket for MULTICAL® 402		x
3026-909	Holder for optical read-out head	x	x
3026-961	Disassemble tool base		x
3026-962	Disassemble tool bracket		x
3130-262	Blind plug including O-ring for the temperature sensor connecting in the flow sensor	x	x
3130-269	Cable clamp with screws		x
5000-286	Supply cable, 1.5 m (2 x 0.75 m^2)		x
5000-337	Module cable 2 m (2 x 0.25 m^2)		x
6556-491	R½ - M10 nipple for direct short temperature sensor	x	x
6556-492	R¾ - M10 nipple for direct short temperature sensor	x	x
6556-570	G½B ball valve with M10x1 sensor socket, 48 mm	x	
6556-571	G¾B ball valve with M10x1 sensor socket, 54 mm	x	
6699-035	USB module configuration cable		x
6699-042	Metal plate for optical readout head, 20 pcs.	x	x
6699-047	Supply label MULTICAL® 403/603, 10 pcs. (2006-681)		x
6699-099	Infrared optical readout head with USB plug	x	x
6699-403	230/24 VAC safety transformer 5 VA		x
6699-404	230/24 VAC safety transformer 10 VA		x
6699-405	230/12/24 VAC safety transformer 63 VA		x
6699-447.E	Internal antenna for Kamstrup radio, 434 MHz		x
6699-448	Mini Triangle antenna for Wireless M-Bus and 2G/4G Network Module		x
6699-482.E	Internal antenna for Wireless M-Bus 868 MHz		x

Accessories

Calibration units

Type number	Description	MULTICAL® 303	MULTICAL® 403
6699-303	Verification unit for MULTICAL® 303 Pt500, heat/cooling (used with METERTOOL HCW)	x	
6699-367	Verification unit for MULTICAL® 403, Pt100, heat/cooling (used with METERTOOL HCW)		x
6699-366	Verification unit for MULTICAL® 403, Pt500, heat/cooling (used with METERTOOL HCW)		x

For further information on MULTICAL® 303, MULTICAL® 403 and their accessories, please refer to the technical description, which you can find on Kamstrup Product Centre.

FILE100003587_D_EN_06.2024

Kamstrup A/S
Industrivej 28, Stilling
DK-8660 Skanderborg
T: +45 89 93 10 00
info@kamstrup.com
kamstrup.com